SECTION 19

CASE/IH

COOLING SYSTEM 447,448
FRONT AXLE & STEERING ..... 449 - 451
ENGINE, FUEL, INTAKE, EXHAUST ..... 452 - 458
CLUTCH 459
BRAKES 460
PTO 461
HYDRAULICS 461,462
3 POINT LINKAGE ..... 462 - 464
INSTRUMENTS & ELECTRICAL ..... 465 - 470
CAB 471,472
SEATS 471

To See Our Most Updated Product Range and Pricing Go To us.sparex.com

All parts are aftermarket parts and are not manufactured by the Original Equipment Manufacturer.

CASE/IH

NOTE: Case/IH models 1290, 1390, 1490, 1690, 1294, 1394, 1494, 1594, 1694 can also be found in David Brown section.

Water Pump Assembly w/ Gasket

(A=12mm) Generator

S.60330

Fits: B275, 276, 354, (364 w/ Generator), B414, 434, (444 w/ Generator), BC144, BD154 Engine
Replaces: 703820R92

Water Pump Assembly w/ Gasket

S.57861

Fits: **Case:** 310, 310E, 310G, 311, 350, 350B, 420C, 430, 431, 440, 450B, 455B, 470, 530, 540, 570, 580, 580B, 580CK, 580RR, 580SCK, 584C, 584D, 585D, 586C, 586D, 630 (w/ 188 or 207 cu. in. Diesel, Case 188 Gas)
Replaces: A146584, A39074

Water Pump Assembly w/ Gasket

S.59526

Fits: 140, 504, 444, 424 (Farmall 340 Gas), (International 330, 340 Gas), Ind. 2500, 2504, 2444, 2424, 4000
Replaces: 375793R92

Back Plate Gasket S.59534
Replaces: 375745R1, R2

Water Pump Assembly w/ Gasket

S.67643

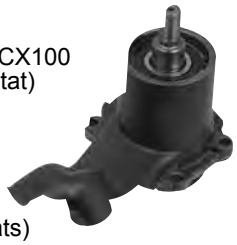

Fits: (C80, CX80, X90, CX90, C100, CX100 ->SN JJE1008568 w/ Single Thermostat)
Replaces: 3293515A1

S.67640

Fits: (C70, CX70, C80, CX80, C90, CX90, C100, CX100 SN JJE1008568-> w/ Dual Thermostats)
Replaces: 311781A1

Water Pump w/ Gasket

S.59032

Fits: JX55, (JX60 1/06->) JX65, (JX70 1/06->) JX70U, JX75, (JX80 1/04->) JX80U, JX85, JX90, JX90U, (JX95 1/04->) JX100U, JX1060C, JX1070C, JX1070N, JX1075C, JX1075N, JX1095N, JX1100U
Replaces: 99454833, 504065104

Water Pump w/ Gasket

S.156679

NEW ITEM

Fits: Skid Steer Loader 410, 420, 420CT
Replaces: SBA145017730, SBA145017790, SBA145017720

Water Pump Assembly w/ O-Ring

2 Bolt Flange

S.57862

Fits: 1896, 2096, 5120, 5220, 5130, 5230, 5140, 5240, 5250, MX100, 110, 120, 135, **Ind.** 480E, F, (580SK ->JJG0020000), 580SE,SK, 584E, 585E, 586E, 590CK Turbo, 680K,L, 780C,D, **Crawlers:** 450C, 455C, 550, 550E,G, 650, 650G, 850G, 850D,E,G, 855D,E, 1150E, 1155E,G
Replaces: A77703, A77471, J802358

Water Pump Assembly w/ O-Ring

3 Bolt Flange

S.57792

Fits: 7110, 7120, 7130, 7140, 7150, 7210, 7220, 7230, 7240, 7250, 8910, 8920, 8930, 8940, 8950, 9110, 9130, 9210, 9230, 9240, 9250, 9260
Crawlers: 1150E, 1155E, 1550
Replaces: A77704

Water Pump Assembly w/ Gasket

(3 7/8" Impeller)

S.63071

Fits: 454, 464, 574, 674, 484, 380B, 584, 684, 784, 385, 485, 585, 685, 395, 495, 595 695, 3220, 3230, 4210, Ind. 2500A, 2500B w/ D179, D239 Diesel
Replaces: 3136053R91

Water Pump Assembly w/ Gasket

(4 7/16" Impeller)

S.63073

Fits: (544, 884, 885, 895, 995, 4230, 4240, 2544 w/ German Diesel)
Replaces: 3132739R93

Water Pump Assembly

w/ Mounting Seal

S.68286

Fits: Farmall 85C, Farmall 85U, Farmall 90, Farmall 95C, Farmall 95U, JX1090U, JX1100U, Maxxum 100, Maxxum 110, Maxxum 115, Maxxum 120, Maxxum 125, Maxxum 130, Maxxum 140, MXU100, MXU110, MXU115, MXU125, MXU130, MXU135, Skid Steer: (435 -> SN N7M425032), (440 -> SN N8M474469), (450 -> SN N8M458415), (465 -> SN N7M452623
Replaces: 87803065, 2852114

CASE/IH

KAT'S Core Plug Heater

600 Watts, 1 5/8" Core Plug

S.7092

Fits: **IH:** 340, 504, 460, 560, 660, 706, (806, 856, 1206, 1256 '63-67), (most 6 cyl)

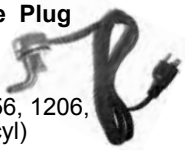

KAT'S Core Plug Heater

750 Watts, 2 1/4" Core Plug

S.7093

Fits: 4-390, 4T-390, 4TA-390, 6-590, 6T-590 Eng.

KAT'S Core Plug Heater

1000 Watts, 2" Core Plug

S.7087

Fits: **Case:** 336, 401, 451, 504 Eng.

KAT'S Core Plug Heater

32mm, 1250 WATTS

S.151859

Fits: All Neuss Engines

KAT'S NPT Block Heater

3/8", 400 WATTS

S.129793

Fits: **JI Case:** 430, 730, 830, 930 **IH:** 188D, 251G, 267D, 284D, 310D, 377G, 401D, 451D

Radiator Caps

S.67597

Fits: Cub, Cub LoBoy (w/ Non-Pressurized System)
Replaces: 351030R91, 400586R1

S.67251 **w/ Lever - Pressurized System**

Fits: Super A, C, Super C, H, Super H*, M, MD, Super M, Super MD, 100, 130, (140 ->SN 13967), 200, 230, (300, 350 Farmall), (400, 450 Farmall) *Not Short Neck

S.67252 - Non-Pressurized (Water)

Fits: A, B, C, Super A, (H, M Early)

Radiator w/ Gasket

S.118480

Fits: Farmall Cub, Cub Loboy
Replaces: 351878R93

Radiator

S.57257

Fits: (B275, B414, B444)
Replaces: 1082414R91

Radiator

Uses Hinged Cooler

S.57258

Fits: (385, 484, 584, 684, 685, 784, 885, Hydro 84 Diesel Only)
Replaces: 3121413R91, 3121414R92, 84524C93

Radiator

S.57261

NEW ITEM

Fits: 5120, 5130, 5140, 5150, 5220, 5230, 5240, 5250
Replaces: 104753A2

Radiator

S.73804

NEW ITEM

Fits: C50, CX50, C60, CX60, C70, CX70, C80, CX80
Replaces: 222890A5

Radiator

S.107419

Fits: (JX55 L/Cab), JX60, (JX65 L/Cab) JX70, (JX1060C, JX1070C, JX1075C L/Cab)
Replaces: 5172927, 5172928

Radiator

S.119963

Fits: (JX75, JX85, JX95 L/Cab), (JX1060C, JX1070C, JX1070N, JX1075C W/Cab), JX1075N, JX1095N
Replaces: 5172926

Radiator

S.73868

NEW ITEM

Fits: JX80U, JX90U, JX100U
Replaces: 5169275

Belt Tensioner Assembly

S.57252

Fits: 5120, 5130, 5220, 5230, 7110, 7120, 7130, 7140, 7150, 7210, 7220, 7230, 7240, 7250, 8910, 8920, 8930, 8940, 8950, 9210, 9230, 9240, 9310, 9330, MX100, 110, 120, 135, MX150, MX170, MX180, MX200, MX220, Ind. 480E, 480E LL, 480F, 480F LL, 570LXT, 580K, 580L, 580M, 580SM, 580SL, 590SL, 590 Turbo, 680L, 780D, Skid Steer 40XT, 60XT, 70XT, 75XT, 85XT, 90XT, 95XT, 1840, 1845C
Replaces: 8732690, J918944, J914086, J911315, J934817, J936203

Belt Tensioner Assembly

S.67956

Fits: MXM120, MXM130, MXM140, MXM155, MXM175, MXM190
Replaces: 87801838

Serpentine Belt (57 1/2")

S.56939

Fits: 5140, 5240, 5250, MX150, MX170
Replaces: J911562

Serpentine Belt

8 Rib (59" Long)

S.56939

Fits: 5120, 5130, 5220, 5230, MX100, MX110, MX120, MX135, Skid Steer (1840 ->SN JAF0118968), 1845C, 40XT, 60XT, 70XT
Replaces: J911558

Radiator Hose

Upper - Ends Different

S.68928

Fits: 140, 240, 404, (424, 444 Gas), Ind. 2404, (2424 Gas)
Replaces: 369397R1

Radiator Hose - Top

S.56942

NEW ITEM

Fits: 5120, 5130, 5140, 5220, 5230, 5240, 5250
Replaces: T103198

Radiator Hose - Bottom

S.56937

NEW ITEM

Fits: 5120, 5130, 5140, 5220, 5230, 5240, 5250
Replaces: T103197

All parts are aftermarket parts and are not manufactured by the Original Equipment Manufacturer.

CASE/IH

Hydrostatic Steering Motor

No Relief Valve, 3/4" X 16 UNF Ports

S.56900

Fits: (385 ->SN 18001), (484, 485 ->SN 18001), (585 ->SN 18001), 684, 685, 784, 884, 885, Hydro 84, Ind. 380B
Replaces: 67698C93

Hydrostatic Steering Motor

S.107450

NEW ITEM

Fits: Farmall 90, Farmall 95, JX55, JX60, JX65, JX70, JX75, JX80, JX85, JX90, JX95
Replaces: 5164616, 5143326

Power Steering Cylinder - 2 WD

S.74611

Fits: 454, 464, 574, 674, 484, 584, 684, 784, 884, 385, 485, 585, 685, 885, 595, 695, 995, 2400, C50, C60, C80, C90, C100, 4210, 4230, 4240
Replaces: 188842A1, 549667R91, 549667R93

Clevis

18mm Thread

S.65452

Fits: 454, 464, 574, 674, 484, 584, 684, 784, 884, 385, 485, 585, 685, 885, 595, 695, 995, 2400, C50, C60, C80, C90, C100, 4210, 4230, 4240
Replaces: 3125306R1

Power Steering Cylinder Repair Kit

S.57266

Fits: 5120, 5130, 5140, 5220, 5230, 5240, 5250 **All 4 WD**
Replaces: 1341819C1

Wheel Hub w/ Studs & Nuts

S.74724

NEW ITEM

Fits: (484, 574, 584, 585, 595, (674 W/ 1 25/32" I.D. Inner Brg.) 684, 685, 695, 784, 785, 884, 885, 895, 995, 3220, 4210, 4240, Hydro 84 W/ Adjustable Straight Axle) C50, C60, C70, C80, C90, C100, CX50, CX60, CX70, CX80, CX90, CX100, MX80C, MX90C, MX100C CX50, CX60, CX70, CX80, CX90, CX100, MX80C, MX90C, MX100C
Replaces: 67527C92

Hydrostatic Steering Motor

w/ Relief Valve, 3/4" X 16 UNF Ports

S.56902

Fits: (385 SN 18001>), (485 SN 18001->), (585 SN 18001->), 3220, 3230, 4210, 4230, 4240, C50, C80, C90, C100, Ind. (380B SN 18001->)
Replaces: 88107C93, 88107C91

Seal Kit, Orbitol Motor

S.57264

NEW ITEM

Fits: 385, 484, 485, 584, 585, 595, 684, 685, 695, 784, 884, 885, 895, Hydro 84, 3230, 4210, 4230, 4240, 5120, 5130, 5140, 5220, 5230, 5240, 5250
Replaces: 1500443C92

Seal Kit - Power Steering Cylinder

S.57842

Fits: 454, 464, 574, 674, 484, 584, 684, 784, 884, 385, 485, 585, 685, 885, 595, 695, 995, 2400, C50, C60, C80, C90, C100, 4210, 4230, 4240
Replaces: 55355C91

Cylinder Rod

18mm Thread

S.57879

Fits: 454, 464, 574, 674, 484, 584, 684, 784, 884, 385, 485, 585, 685, 885, 595, 695, 995, 2400, C50, C60, C80, C90, C100, 4210, 4230, 4240

Seal Kit, Power Steering Cylinder, 2WD

S.65088

NEW ITEM

Fits: JX70U, JX80U, JX90U, JX100U
Replaces: 9966100

Wheel Bearing Set : Contains 1 Each

S.14041

NEW ITEM

Bearing and Cup - Outer

Replaces: 536053R1, 175507 - Bearing # 68111,536054R1 - Cup # 68149

Bearing and Cup - Inner

Replaces: 399933C91 - Bearing # LM102949, 399934C1 - Cup # LM399934C1

Wear Sleeve

Replaces: 67328C1

Hub Seal

Replaces: 370254R91

Fits: (484, 574, 584, 585, 595, (674 W/ 1 25/32" I.D. Inner Brg.) 684, 685, 695, 784, 785, 884, 885, 895, 995, 3220, 4210, 4240, Hydro 84 W/Adjustable Straight Axle) C50, C60, C70, C80, C90, C100, CX50, CX60, CX70, CX80, CX90, CX100, MX80C, MX90C, MX100C, CX50, CX60, CX70, CX80, CX90, CX100, MX80C, MX90C, MX100C

CASE/IH

Steering Gear Repair Kit

S.59527

Fits: Super A,
100, 130, 140

Worm Gears

(9 Full Teeth, 3/16" Keyway)

Fits: Super A, 100, 130, 140

S.57938

Replaces: 368676R1

S.57939 Shaft
(Tapered, 3/16" Keyway)

Replaces: 356549R2

S.57940 Shaft Nut - Elastic Locknut

Replaces: 359040R1

Case Power Steering Pump

S.61610

Fits: Case - 580D TLB
Ind - 480C, 480D, 580C, 580D
Forklift - 584C, 584D,
585C, 585D, 586C, 585D
Replaces: D84179

Front Wheel Bearing Kit

S.67453

Fits: H, Super H, M, MD, Super M, Super MD, Super W4, 300, 350
Replaces: IH; ST2049, ST974, 13321DA, 13417D,
Bearing; 14138A, 14274, 1779, 1729 Sleeve; 45848D,
Gasket; 43828D

Tie Rods - 4WD

Fits: C50, C60, C70, C80, C90, C100, CX70
CX80, CX90, CX100, MX80C, MX90C, MX100C, 3220, 3230, 4210, 4230, 4240

S.70604 - LH Thread
M18 x 1.5 LH Female Thread
6 3/4" Long

Replaces: 137047A1

S.70605 - RH Thread
M18 x 1.5 RH Female Thread
6 3/4" Long

Replaces: 137048A1

Knuckles

S.67551 - Steering Shaft Support

Fits: Cub, Cub LoBoy
Replaces: 350902R3

S.65450 w/ Grease Zerk

Fits: A, Super A, 100, 130, 140
Replaces: 9442DX

Front Axle Bracket

S.57749

Fits: 385, 454, 464, 474, 484, 485, 574, 584, 585, 674, 684, 685, 784, 785, 884, 885, Hydro 84, Ind. 258, 268, 278, 2400, 2400A, 2500, 2500A
Replaces: 405580R11

Bushings

S.57743 Replaces: 379748R2
OD 1.625", Wall Thickness .059", Length .610"

S.57744 Replaces: 1536870C1
OD 1.130", Wall Thickness .059", Length 1.318"

Front Wheel Bearing Kit

S.67452

Fits: A, Super A, B, C, Super C, 100, 130, 200, 230
Replaces: IH; 54631H, 54630H, 13823V, 43440D, Bearing;
15118, 15250, 09794, 09196,
Sleeve; 49117D, Seal; 55453D

Front Wheel Bearing Kit

S.67454

Fits: 140, 240, 330, 340, (404 Farmall), (424, 444 w/ Std Front Axle),(504 Farmall), (2404 IH w/ Std Front Axle),(2424, 2444 w/ Std Front Axle), (2504 Farmall) Replaces: IH;
651818R91, 651817R1, 651815R91, 651814R1,
Bearing; LM67048, LM67010, LM11949, LM11910
Sleeve; 491170, Seal; 372440R91, Gasket; 49116D

Tie Rods - 4WD

Fits: C50, C60, C70, C80, C90, C100, CX70
CX80, CX90, CX100, MX80C, MX90C, MX100C, 3220, 3230, 4210, 4230, 4240

S.65868 - LH Thread
M20 x 1.5 RH Thread - Short Side
M18 x 1.5 LH Thread - Long Side
7 1/4" Long

Replaces: 1966127C1

S.65866 - RH Thread
M20 x 1.5 RH Thread - Short Side
M18 x 1.5 RH Thread - Long Side
7 1/4" Long

Replaces: 1966125C1

All parts are aftermarket parts and are not manufactured by the Original Equipment Manufacturer.

CASE/IH

Steering Wheel

(15” Dia 2 3/4” Dish, 3/4” Keyed Shaft)

S.56929

Fits: Cub, Cub LoBoy, Farmall A, B, C (Super A, A-1, SN 250001-355669)
Replaces: 60069D, 46512DA

Steering Wheel

(20” Dia. Keyed Shaft - 4 Steel Spokes)
RESTORATION QUALITY

S.67509

Fits: M, MD, Super M, Super MD, Farmall 400, 450, Case 600, 650
Replaces: 557282R91

Steering Wheel

(17 5/8” Dia 3 1/2” Dish, 3/4” Keyed Hub)

S.66495

Fits: 100, 130, 200, 230, 300, 400, Super A (SN 3560D1->) C, Super C (SN 75098>) H, M, Super M, MD, W4, W6, Super W6, W9
Replaces: 60070D

Steering Wheel

(17” Dia, 7/8” Dia, 36 Spline)
NOT ORIGINAL

S.60478

Fits: 140, 404, (424, 444 Manual Steering) 504, 560, 660, Ind. 2404, (2424, 2444 Manual Steering), 2504
Replaces: 366557R2

Steering Wheel

Splined RESTORATION QUALITY

S.67508

Fits: 140, 240, 330, 340, Farmall 350, 404, (424, 444 w/ Manual Steering), Farmall 450, 460, 560, 4100, 4156, 4166, 4186, Ind. 2404, (2424, 2444 w/ Manual Steering), 2404
Replaces: 366557R1, 366557R2

Steering Wheel

(16” Dia, 7/8~1” Tapered Keyed Hub, 3 Steel Spokes)
RESTORATION QUALITY

S.67505

Fits: **Case:** V, VC, VI, VO, VA, VAC, Ind. 320, (320B -> SN 6120001) 420, (420B -> SN 6120001) 425
Replaces: A7668, VT2230

Steering Wheel

RESTORATION QUALITY

S.67510

Fits: 504, 606, 706, 806, 1206, (424, 444 w/ Power Steering), 826, 1026, 544, 454, 656, 756, 856, 1256, 1456, 464, 664, 666, 766, 966, 1066, 1466, 1566, 1468, 1568, 574, 674, 484, 584, 684, 784, 884, 686, 786, 986, 1086, 1486, 1586, (4386, 4586, SN 1501->), 4786, Hydro 70, 84, 86, 100, 186, C50, C60, C80, C90, C100, 4210, 4230, 4240, 3088, 3288, 3388, 3588, 3688, 3788, 5088, 5288, 5488, 6388, 6588, 6788, 7288, 7488
Replaces: 385156R1

Steering Wheel

(40 Spline) RESTORATION QUALITY

S.67764

Fits: **Case:** (300B, 400B, SN 612001->), (430, 530 ->SN 8297800), (470, 570 except Hydrostatic Steering), (510B, 511B, 610B, 611B SN 612001->), (700, 800 SN 8140001 ->), (730, 830 except Grove), (730, 830, 930, 1030 Comfort King), (Ind. 320B, 420B SN 612001->)
Replaces: A20456

Steering Wheel

(7/8”-36 Spline)

S.65609

Fits: 706, 806, 1206, 826, 1026, 756, 856, 1256, 1456, 766, 966, 1066, 1466, 1566, 1468, 1568, Hydro 100, Ind. 2706, 2806, 21206, 2826, 2756, 2856, 21256, 21456 (All with Tilt Wheel)
Replaces: 400217R1

Steering Wheel

(15 1/4” Dia, 13/16”-36 Spline)

S.68289

Fits: **Case:** 770, 870, 970, 1070, 1170, 1270, 1370, 1570, 2470, 2670, 2870, 1175, 1090, 2090, 2290, 2390, 2590, 4690, 2094, 2294, 2394, 2594, 3294, 3394, 3594, Ind. 480, (480A, B, C, D, LL), 580, (580B, C, D, F, G), (584C, D), (585C, D), (586C, D), (680B, C, E, H), 780B
Replaces: A65544, A61007

Steering Wheel Cap

(2 1/2” Opening)

S.65612

Fits: 154 Cub, 184 Cub, 185 Cub LoBoy
Replaces: 393157R2

CASE/IH

Top Gasket Sets

S.57677
Fits: BD144, BD154 Engine

S.57676
Fits: D155, D179 Engine

S.57678
Fits: D206, D239, D246 Engines

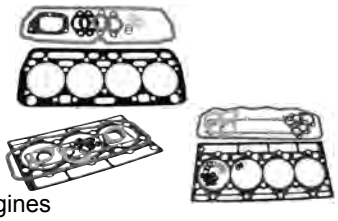

Piston w/ Rings

S.59550
Fits: 2096, 5120, 5140, 5150, 5220, 5240, 5250
Replaces: A77730

NEW ITEM

Liner

S.59553
Fits: 5120, 5130, 5140, 5220, 5230, 5240, 5250, MX80C, MX90C, MX100, MX110, MX120, MX150, MX170
Replaces: J904166

NEW ITEM

Ring Set - 3 Ring Piston

Per Cylinder

S.59548
Fits: 5120, 5140, 5220, 5240, 5250, MX110, MX120, MX135, MX150, MX170, SPX3150, SPX3185, Ind. **Skidsteer:** 60XT, 70XT, 90XT
Replaces: A77727, J802746

NEW ITEM

Top Gasket Set

S.59507
Fits: 5130, 5140, 5230, 5240, 5250
Replaces: A77859, 87434407

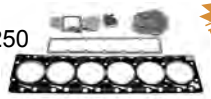

NEW ITEM

Front Crankshaft Seal

62 X 79.75 X 10MM

S.59506
Fits: 5120, 5130, 5140, 5220, 5230, 5240, 5250, MX100, MX110, MX120, MX135, MX150,MX170, Skidsteer: 1840, 1845C, 40XT, 60XT, 70XT, 75XT, 85XT, 90XT, 95XT
Replaces: A77890, J906080

NEW ITEM

Connecting Rod Bearings

Fits: 1896, 2096, 5120, 5130, 5140, 5220, 5230, 5240, 5250, MX100, MX110, MX120, MX135, MX150, MX170 Ind. Skidsteer 1840, 1844, 1845C, 40XT, 60XT, 70XT, 75XT, 85XT, 90XT, 95XT

S.59554 - **STD. - 1 Pair**
Replaces: A77894, A77465, A77982

S.59555 - **.010 - 1 Pair**
Replaces: A77466

NEW ITEM

Engine Overhaul Kit - D239 Diesel

w/ Keystone Rings
Kit Contains: Pistons, Rings, Liners, Rod Bushings, Top Gasket Set, Bottom Gasket Set, Seals

S.57927
Fits: 574, 674, 684, 685, 685XL (D239 Engine), Ind. 2500

Bottom Gasket Sets

S.57689
Fits: BD144, BD154 Engine

S.57688
Fits: D155, D179 Engine

S.57690
Fits: D206, D239, D246 Engines

Top Gasket Set - 4 Cyl.

S.59500
Fits: 5120, 5220
Replaces: A77975

NEW ITEM

Rocker Cover Gasket

S.59504
Fits: 5120, 5130, 5140, 5220, 5230, 5240, 5250, MX100, MX110, MX120, MX135, MX150, MX170, SPX3150, SPX3185, SPX3200, SPX3200B, SPX3310, Ind. Skidsteer 60XT, 70XT, 75XT, 85XT, 90XT, 95XT
Replaces: J930906

NEW ITEM

Bottom Gasket Set

S.59508
Fits: 5130, 5140, 5230, 5240, 5250, MX100, MX110, MX120, MX135, SPX3150, SPX3185, Ind. 680L, 780D
Replaces: A77861, A77674, A77641

NEW ITEM

Rear Crankshaft Seal

125 X 150.5 X 14.3MM

S.59505
Fits: 1896, 2096, 5120, 5130, 5140, 5220, 5320, 5420, 5250
Replaces: J909411, 87590147

NEW ITEM

Connecting Rod Bearings

Fits: 1986, 2096, 5120, 5130, 5140, 5220, 5230, 5240, 5250, MX100, MX110, MX120, MX135, MX150, MX170, Ind. Skidsteer 1840, 1845C, 60XT, 70XT, 90XT, 95XT

S.59558 - **STD. - Non Thrust - 1 Pair**
Replaces: A77405, 84282771

S.59561 - **STD. - Thrust - I Pair**
Replaces: A77406, 84282776AM

NEW ITEM

All parts are aftermarket parts and are not manufactured by the Original Equipment Manufacturer.

CASE/IH

Engine Oil Pump

(w/ BD154 Engine)

S.75983

Fits: (B414 *SN 30945->), 276, 354, 364, 384, 424, 434, 444, Ind. 2300, 2350A, 2424, 2444, 3444 (*Can be used on earlier SN if oil pan **S.7893** is used)
Replaces: 3064060R91

Engine Oil Pump

S.59565

Fits: 1896, 2096, 5130, 5140, 5230, 5240, 5250, MX100, MX110, MX120, MX135 MX150, MX170
Replaces: J906414, J941742, J937404, J914006

Engine Oil Pump

S.5934

Fits: C50, CX50, C60, CX60
Replaces: 296240A1

Engine Oil Pump

S.41938

Fits: C70, CX70, C80, CX80, C90, CX90, C100, CX100, MX80C, MX90C, MX100C
Replaces: 293177A1

Complete Cylinder Head

w/ Valves Assembled in Head

S.66580

Fits: B414 (w/ BD-154 Engine), 364, 384, B444, 2350
Replaces: 3044489R91

Engine Oil Filter L/ Gasket

S.67968

Fits: Cub, Cub LoBoy, 154, 184, 185 Cub
Replaces: 376373R91

Engine Oil Filter w/ Gasket

S.67970

Fits: (A, AV, B, BN ->SN 97937), (H, HV ->SN 121021), (M, MV SN 59394->), W-4 ->SN 4957), (W-6 SN 4253->), 400, 450 Gas
Replaces: 376375R91, 3604431R91

Engine Oil Filter w/ Gasket

S.67969

Fits: (A, AV, B, BN SN 97938->), (H, HV, SN 121022->), C, Super C, Super H, HV, 100, 200, 230, 240, 300, 340,350, 404, 424, 444, 504, 2404, 2424, 2444, 2504, Gas
Replaces: 376374R91

Engine Oil Filter w/ Gasket

S.67973

Fits: (M, D, MDV ->SN 59393), (Super M, M-TA W-6 ->SN 4252), W-9, WD-6, WD9, Super WD-6, Super WD-9, (Farmall 400, 450 Diesel)
Replaces: 376376R91, 3062832R91

Engine Oil Filter w/ Gasket

S.67974

Fits: **Case:** VA, VAC, 300, 300B, 320, 400B, 500B, 600B
Replaces: VT3589, A36136

Engine Oil Filter - Spin-on

(3.66" OD, 1"-12Thread" ID, 4.29" Ht)

S.76254

Fits: 385, 454, 464, 474, 485, 544, 574, 585, 666, 674, 685, 686, 766, 785, Hydro 70, Hydro 86, 3220, 4210, 4230, 4240, Ind. 2400A, 2400B, 2500A, 2500B, 2544
Replaces: 3136046R93

Engine Oil Filter

(3.75" OD, 1"-16Thread" ID, 6.96" Ht)

S.109658

Fits: 1896, 2096, 5130, 5140, 5230, 5240, 5250
Replaces: J908615, **S.76280**

Engine Oil Filter

(3.74" OD, 3/4"-16Thread" ID, 5.27" Ht)

S.40538

Fits: C50, CX50, C60, CX60, C70, CX70
Replaces: 3118119R1

Engine Oil Filter

(3.74" OD, 3/4"-16Thread" ID, 6.92" Ht)

S.40539

Fits: C80, CX80, C90, CX90, C100, CX100, MX80C, MX90C, MX100C
Replaces: 3214797R1

CASE/IH

Carburetor

S.69228

Fits: A, AV, B, BN, C, Super A, Super C
Replaces: 352376R92, 355485R91, 354184R93

Gas Cap

(Buy Clean Fuel, Keep It Clean)

S.67253

Fits: Cub, A, B, C, H, M, Super A, Super C, Super M, 100, 130, 200, 230, 300, 350, 400, 450, F12, F20, F30
Replaces: 23995DA

Basic Carburetor Repair Kit

S.66447

Fits: IH Cub (->SN 312389)
Repairs: IH Carb 63349C91

Basic Carburetor Repair Kit

S.68330

Fits: Farmall, Super H, M, MV, MTA, Super M, O-6, W9, WR9, 300, 350, 400, 450
Replaces: BK12V

Basic Carburetor Repair Kit

S.68329

Fits: (Farmall H, HV, w/ IH Carb 45108DD, 50981DC), O-4
Replaces: BK10B

Basic Carburetor Repair Kit

Zenith Carburetor

S.72008

Fits: 830, 930

Fuel Strainers - OEM Quality

S.65545
Includes 5/16" Compression Fitting (1/8" Pipe)

Fits: Super A, AV, AI, AVI, C, 100, 130, 140, Cub, Cub 154, 184, 185
Replaces: 61782C91

S.61581
(1/8" Pipe)

Fits: H, M, MD, 460, 560, 660, 656, 706, 806, 826, 856
Replaces: 370832R91

S.61579
(1/8" Pipe)

Fits: 424, 2424, 444, 2444
Replaces: 614421R91

S.61580
(1/8" Pipe)

Fits: Case D, S, V, VA
Replaces: A31102

Glass Bowl - 2"

S.66417

Replaces: 357958R1

Glass Bowl - 2 1/8"

S.65504

Replaces: 357957R1

Screen & Gasket Set

2 1/8" Bowl, 3/8" Center Hole

S.65544

Replaces: 355888R2, 13194C

Float

w/ Marvel-Schebler Carburetor

S.65641

Fits: A, Super A, B, 100, 130, 140, 200, 230, 240, 330, 340, 404, 424, 504, Ind. 2404, 2424
Replaces: 69919D

Gaskets - 2" Bowl

(10 pack)

S.61508

Replaces: 360679R1

All parts are aftermarket parts and are not manufactured by the Original Equipment Manufacturer.

CASE/IH

Fuel Filter

S.61788

Fits: **Case:** 430, 530, 470, 570, 630, Ind. 430CK, 480CK, 530CK, **Crawler:** 310F, 310G, 450
Replaces: A35668

Fuel Filter

S.62139

Fits: 385, 395, 454, 464, 484, 485, 495, 544, 574, 585, 595, 664, 674, 684, 685, 686, 706, 756, 785, 786, 826, 884, 885, 995, Hydro 86, 2400, 2500, 3088, 3288, C80, CX80, C90, CX90, C100, CX100, MX80C, MX90C, MX100C
Replaces: 3132428R2, 218100A1, **S.76253**

Fuel Filter

S.109691

Fits: (MXM120, MXM130, MXM140, MXM155, MXM175, MXM190 -. SN HA163029
Replaces: 87802927

Fuel Cap

S.7894

Fits: B275, 354, 364, 384, B414, 414
Replaces: 707822R91

Fuel Cap

S.144889

NEW ITEM

Fits: MX100, MX110, MX120, MX135, MX150, MX170, MX180, MX200, MX210, MX220, MX230, MX240, MX255, MX270, MX285
Replaces: 257349A1, 84385969

Glow Plug

S.57699

Fits: 275, 276, 354, 374, 384, 414, 434, 444, 2276, 3434 Loader
Replaces: 710348R1

Heater Plug

S.40627

Fits: 454, 474, 475, 574, 674, 484, 584, 684, 784, 884, 385, 485, 485XL, 585, 585XL, 685, 685XL, 785, 785XL, 885, 885XL, 395, 495, 495XL, 595, 595XL, 695, 695XL, 795, 795XL, 895, 895XL, 995XL, 3210, 3220, 3230, 4210, 4220, 4230, 4240, 84 Hydro, Ind. 238, 248, 258, 268, 288,
Replaces: K928523

Fuel Filter

S.129389

Fits: C50, CX50, C60, CX60, C70, CX70
Replaces: 218577A1

Fuel Filter Kit

Primary & Secondary Contains: S.109660 Primary, S.76279 Secondary

S.57864

Fits: 7110, 7210, 8910, 9310, 5120, 5220, 7120, 7220, 8920, 5130, 5230, 7130, 7230, 8930, 9330, 5140, 5240, 7140, 7240, 8940, 5250, 7150, 7250, 8950, Ind. 480F, (570 LXT ->1/98), 580L, 590 Turbo, MX180, MX200, MX220,**Crawler:** 550E, 550G, 650G, 850E, 850G, 855E, 1150E, 1150G, 1155E, **Skid Steer:** 1840, 1845C
Replaces: J925274, J903640, A77470

Fuel Filter - Metal Inline

S.109063

NEW ITEM

Fits: 5120, 5130, 5140, 5220, 5230, 5240, 5250, 7110, 7120, 7130, 7140, 7150, 7210, 7220, 7230, 7240, 7250, 9110, 9130, 9210, 9230, 9240, 9310, 9330, C50, CX50, C60, CX60, C70, CX70, C80, CX80, C90, CX90, C100, CX100, MX80C, MX90C, MX100, MX100C, MX110, MX120, MX120, MX135, MX150, MX170, Ind. Skidsteer Loader 40XT, 60XT, 70XT, 75XT, 85XT, 90XT, 95XT, 430, 435, 440, 445, 450, 1825B
Replaces: D139225

Fuel Filter

S.109649

NEW ITEM

Fits: (Farmall 85C, 85U, 90, 95, 95C, 95U), (JX1085C, 1095C),(Maxxum 100, 110, 115, 125, 140), (MXU115, 130)
Replaces: 87803189

Fuel Cap - Plastic

S.107544

NEW ITEM

Fits: JX55, JX60, JX65, JX70, JX70U, JX75, JX80, JX85, JX90, JX90U, JX95 JX100U, JX1060C, JX1070C, JX1075C, JX1080U, JX1085C, JX1090U,JX1095C, Farmall 90, Farmall 95
Replaces: 82009352

Fuel Cap

w/ Internal Locking Threads, 2 Keys Included

S.65289

NEW ITEM

Fits: C50, CX50, C60, CX60, C70, CX70, C80, CX80, C90, CX90, C100, CX100,MX80C, MX90C, MX100, MX110, MX120, MX135, MX150, MX170
Replaces: 226384A1, 277106A1

Glow Plug

S.67464

Fits: 504, 706, 656, 460, 560, 660, 2504, 2706, 2656, **Combines;** 403, 405, (715 ->SN 23001), (Engines; D188, D236, D282, D301)
Replaces: 304131R3, 343894R1, 343977R1

Resistor Indicator - Glow Plug

S.59539

Fits: B250, B275, 354, 414, 424, 434, 444, Ind. 2300, 2424, 2444
Replaces: 3042230R91, 703557R92, 706685R92

CASE/IH

Fuel Lift Pump w/ Gasket

S.41330

Fits: C50, CX50, C60, CX60
Replaces: 296265A1

Fuel Lift Pump w/ Gasket

S.40563

Fits: B475
Replaces: 3118234R91

Fuel Lift Pump w/ Gasket

S.57742

Fits: 5120, 5220, 5130, 5230, 5140, 5240, 5250, Ind. 480E, 480ELL, 480F, 480FLL, 580K, 580SE, 580SK, 584E, 585E, 586E, 590 Turbo, **Crawlers:** 450C, 455C, 550E, 650, 850D, 855E, 855D, **Skidsteer:** 1840, 1845C, 75XT, 85XT, 90XT, 95XT
Replaces: J904374, J928143

Fuel Lift Pump w/ O-Ring

S.107984

Fits: (JX55, JX65, JX75, JX85 SN 13287->), JX60, JX70, JX80, JX90, JX95, JX100U, JX1060C, JX1070C, JX1070N, JX1075C, JX1075N
Replaces: 4757882, 504090936

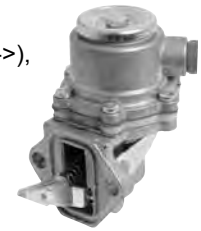

Fuel Lift Pump w/ Gasket

S.42440

Fits: C70, C80, C90, C100, CX70, CX80, CX90, CX100, MX80C, MX90C, MX100C
Replaces: 295976A1

Electric Fuel Pump

S.58764

Fits: (MXM120, MXM130, MXM140, MXM155, MXM175, MXM190 -. SN HA163029
Replaces: 87802238

Injector Nozzle

S.67442

Fits: C80, CX80, C90, CX90, MX80C, MX90C
Replaces: 293758A1

Fuel Lift Pump w/ Gasket

S.63036

Fits: B275, 276, 354, 364, 384, 434, B414, B444, 2300,
Replaces: 708294R93

Fuel Lift Pump w/ Gasket

S.63038

Fits: 454, (574, 674, 2400 Europe), 616, 622 Cotton Picker
Replaces: 3132697R92, 3055375R93

Fuel Lift Pump w/ O-Ring

S.118466

Fits: (Farmall 65C, 75C, 85C, 85U, 90, 95, 95C, 95U, 100U,) JX1080U, JX1085C, 1090U, (Maxxum 100, 110, 115, 125, 140), MXU100, MXU115, MXU130, **Skid Steer Loader:** 420, 430, 435, 445, 450, 465
Replaces: 2830122, 2830266

Fuel Lift Pump w/ O-Ring

S.63039

Fits: JX60, JX65, JX70, JX70U, JX75, JX80, JX80U, JX85, JX90, JX90U, JX1070N, JX1075N
Replaces: 4757883, 504090936

Primer Pump

S.59592

Fits: (585 ->12/90 w/ Cab), (685, 885, 86->), (595, 695 w/ Cab), (995 90-> w/ Cab), (4210, 3220, 3230, 4230, 4240 w/ Cab)
Replaces: 1202938C92, 1202938C91

Solenoid - Fuel Shutoff

S.42699

Fits: C50,CX50, C60, CX60, C70, CX70, C80, CX80, CX85, C90, CX90, CX95, C100, CX100
Replaces: 340521A1, 218323A1

Injector Nozzle

S.67443

Fits: C100, CX100, MX100C
Replaces: 218100A1

All parts are aftermarket parts and are not manufactured by the Original Equipment Manufacturer.

CASE/IH

Air Filters

Fits: C50, CX50, C60, CX60, (Skidsteer 1838)
Replaces: 133720A1, 133721A1

S.76431 - Outer
(OD 5.10", ID 3.20", Height 12.30")

S.76902 - Inner
(OD Top 2.98", OD Bottom 3.27", Top Closed, ID Bottom 2.25", Height 11.77")

Air Filters

Fits: C70, CX70, C80, CX80, C90, CX90, C100, CX100, JX95, MX80C, MX90C, MX100C, **Skidsteer:** (Series 3: 410, 420, 430, 435, 440, 445), 70XT, 90XT, 95XT, **Crawler:** 550H, 650G, 650H, 650K, 750H, 750K, 750L, Ind. 570LXT, 570MXT, 580L, 580M, 580SL, 580SM, 5590SL, 590SM

S.76873 - Outer
(6.45" OD, 3.61" ID, 13.91" Ht)
Replaces: 222421A1

S.76747 - Inner
Replaces: 222422A1

Air Filters

Fits: 5120, 5130, 5140, 5250, 5230, 5240

NEW ITEM

S.76763 - Outer
Replaces: D56453

S.41854 - Inner
Replaces: N8153

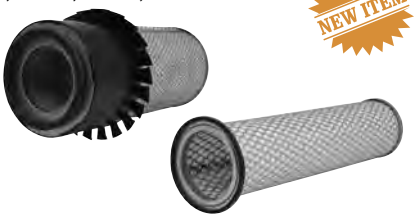

Air Filters

Fits: 385, 395, 484, 485, 495, 584, 585, 684, 685, 784, 785, 884, Hydro 84, Ind. 248, 268, 278

S.62141 - Outer
Replaces: 3125199R2

S.76250 - Inner
Replaces: 3115569R2

Precleaner Assemblies

S.68207 (1 3/8" ID)

Fits: Cub, (A, Super A, B ->SN 355669)
Replaces: 356254R91, 59206D, X-1596-A

S.68208 (1 3/4" ID)

Fits: (Super A, B SN 356001->), C, Super C, 100, 130, 140, 200, 230, 240, 340
Replaces: 352612R9

Glass Jar
S.68209
Replaces: 64178D

Muffler - Vertical

Grey - 2 1/2" Clamp (Inlet 2 3/8", Outlet 2 1/2", 29" Length)

S.56923

Fits: **Gas:** H, Super H, M, Super M, W4, W6, 300, 350, 400, 450, 560, 606, 656 **Diesel:** MD, Super MD, Super WD6, 400, 450, 350, 340, 504, 460, 606, 656, 560, 706, 2500, 2504, 3514
Replaces: 403551R1

Muffler - Vertical

Use Clamp S.8875

S.61350

Fits: Cub, Cub LoBoy
Replaces: 351436R92

Muffler - Vertical

(Inlet 1 15/16"ID, Outlet 2" OD)

S.68300

Fits: Super A, AV, B, BN, C, Super C, 100, 130, 140, 200, 230, 240, 330, 340, 404, Ind. 2404
Replaces: 360720R91

Muffler - Vertical

Aluminum (1 7/8" Inlet, 1 11/16" Outlet, 39 1/2" Length)

S.6305

Fits: B275, 276, 354, 374, 384, B414, 434, B444, 2276, 3434 Loader
Replaces: 3109792R92

Muffler

S.56910

Fits: 5120, 5220
Replaces: A184460

Muffler

S.56911

Fits: 5130, 5230, 5140, 5240, 5250
Replaces: A184475, 87704568

Extension Pipe

S.57396

Fits: 5120, 5130, 5230, 5140, 5220, 5240, 5250
Replaces: A189049

Muffler - Underhood Type

S.149351

Fits: JX1060C, JX1070C, JX1075C, JX1075N, JX1095N, JX70, JX90, JX95

NEW ITEM

CASE/IH

Muffler - Vertical

Black, Use S.8882 Clamp
Fits: **UK Series** 454, 474, 475, 574, 674
Replaces: 403551R1, 533924R1, 529372R91

S.4412
(27" Length, 2 3/8" Inlet, 2 3/8" Outlet)

S.57391 Exhaust Pipe
Fits: 584, (585 86->), 595,
684, 784, 884, 885,
Replaces: 80547C1

S.57389 Exhaust Elbow
Fits: 574, 584, 585, (595 ->SN JJE0014501),
674, 684, 685, 695, 784, 785, 884, 885,
(895 ->SN JJE0014501)
Replaces: 3136668R1

S.57702 Gasket
Fits: 474, 574, 584, 585, 595, 674,
684, 685, 695, 784, 785, 884, 885,
895, 3230, 4210, 4220, 4230
Replaces: 3136248R1

S.57387 Exhaust Manifold
Fits: 474, 574, 584, 585, 595, 674,
684, 685, 695, 784, 785, 884, 885,
895, 3230, 4210, 4220, 4230
Replaces: 3136066R12

S.57700 Gasket -
Manifold to Head
Fits: 474, 574, 584, 585, 595, 674,
684, 685, 695, 784, 785, 884, 885,
895, 3230, 4210, 4220, 4230
Replaces: 3132434R1

Manifold

Gas, Less Gasket Set

S.60312
Fits: 130, 140, 200, 230, 240,
330, 340, 404, 424, Ind. 2404,
2424, 444, 2444, 500 Crawler
Replaces: 369645R22, 388584R21

Gasket Set

S.69280
Fits: 130, 140, 200, 230, 240,
330, 340, 404, 424, Ind. 2404,
2424, 444, 2444, 500 Crawler
Replaces: 25520D, 352014R2

Muffler - Horizontal

S.58934
Fits: (JX70U, JX80U, Less Cab)
Replaces: 5167695

Muffler - Vertical

Heat Resistant Black
(1 7/8" Inlet, 1 11/16 Outlet, 36 1/2" Length), 2" Clamp

S.14517
Fits: 275, 276, 354,
374, 384,
414, 434, 444,
2276, 3434 Loader
Replaces: 3109792R92

S.43140 Extension Pipe w/ Gasket
Fits: B275, 354, 384,
B414, 444, 2300, 2444
Replaces: 3072544R1, 704613R1

S.59540 Exhaust Manifold -
Vertical, Diesel
Fits: B275, 354, 384,
B414, 444, 2300, 2444
Replaces: 3042719R11

S.57701 Gasket -
Manifold to Head
Fits: B275, 354, 384,
B414, 444, 2300, 2444
Replaces: 704165R3

Muffler - Vertical

S.19225
Fits: **UK Series -** 484, 584, 684, 784, 884,
385, 485, 485XL, 585, 585XL,
Replaces: 83027C1

All parts are aftermarket parts and are not manufactured by the Original Equipment Manufacturer.

CASE/IH

Clutch

Fits: (Cub 1947~1953), (Cub LoBoy 1955~1958), (IH Cub->1976)

Pressure Plate
(6 1/2")
S.70940
Replaces: 351760R91

Clutch Disc
(6 1/2" - 15/16" - 10)
S.67571
Replaces: 351773R1

Bushing - Clutch Pilot
S.67853
Replaces: 251266R1

Release Bearing
S.67875
Replaces: 350921R11

Clutch Alignment Tool

(15/16" - 10)

S.70941

Fits: (Cub 1947~1953), (Cub LoBoy 1955~1958), (IH Cub->1976)

Pressure Plate

9" 3 Lever

S.69297

Fits: Farmall A, Farmall B, Farmall C, Farmall Super A, Farmall Super C, 100, 130, 140, 200, 230, 240
Replaces: 375493R91

Clutch Disc

(9" x 1 1/4" - 6 Spline) - Organic Sprung

S.69298

Fits: Farmall A, Farmall B, Farmall C, Farmall Super A, Farmall Super C, 100, 130, 140, 200, 230, 240
Replaces: 56631DB

Torque Amplifier

Fits: Super MTA, 300, 330, 340, 350, 400, 450, 460, 504, 544, 560, 606, 656, 660, 664, 666, 686, Ind. 2504, 2544, 2606, 2656, (Use Disc S.72832 -7"-14 Spline)

S.68283 Pressure Plate (7")

S.72832 Clutch Disc
(7" - 14 Spline)

Replaces: 375701R91

Torque Amplifier Clutch Kit

Power Shift (6 Friction, 4 Steel, 2 Piston Seals)

S.56953

Fits: 684, 784, 884, 485, 585, 685, 885, 395, 495, 595, 695, 895, 995, 4210, 3220, 3230, 4230, 4240, C50, C60, C80, C90, C100
Replaces: 401716R3, 401717R3, 401724R1, 402571R1

Clutch Disc

4 Ceremetallic Pads (11" x 1 1/8-17)

S.73461

Fits: **Case:** (430, 530, 630, Gas SN 8191147->), (430CK, 530CK, Gas)
Replaces: A36414

Clutch Rep Set (1 5/8"-10)

Contains: 11" Split Torque Pressure Plate, 6 Pad Drive Disc, Release & Pilot Bearing

S.61265

Fits: 434, 454, 464, 574, 674, 484, 584, 684, 784, 884, 385, 485, 585, 395, 495, 595, 3210, 3220, 3230, Ind. 380B, 2400A, 2400B, 2500A, 2500B, 3400, 3400A, 3500A, 4500, 3434
Replaces: 70716C1, 401479R93

Master Cylinder - Clutch

S.102609

Fits: (CX50, CX60, CX70, CX80, CX90, CX100 SN JJE1014495->)
Replaces: 321288A1

Slave Cylinder - Clutch

S.102659

Fits: (585, 595, 685, 695, 885, 895, 995 w/ Cab) (3220 SN 11070000->, 3230, 4210, 4230, 4240 w/ Cab) (CX50, CX60, CX70, CX80, CX90, CX100 -> SN JJE1014494)
Replaces: 3129800R92

Slave Cylinder - Clutch

S.102630

Fits: (CX50, CX60, CX70, CX80, CX90, CX100 SN JJE1014495->)
Replaces: 394467A1

CASE/IH

Bonded Brake Discs

S.61885
(8” x 5” - 12 Spline)

Fits: 706, 806, 756, 826, 856, 1026, 766, 966, 1066, 1206, 1256, 21206, 21256, 2706, 2756, 2806, 2826, 2856
Replaces: 384166R92, 1975468C2

S.61881
(6” x 3 1/8” - 10 Spline)

Fits: 330 Diesel, 460, 504, 606, 2504, 2606
Replaces: 368292R92, 1975460C2

S.61884
(6 1/2” x 3 1/2” - 10 Spline)

Fits: 354, 364, 384, 424, 444, 2300, 2424, 2444, 3414 (Late), 3444
Replaces: 395161R91, 1975464C2

S.61879
(5” x 2 3/4” - 10 Spline)

Fits: Super C, 200, 230, 240, (330 Gas), 340, 404, 2404
Replaces: 1975456C2, 368181R92

S.61880
(5 5/8” x 3 3/8” - 10 Spline)

Fits: Model H, Super H, Super W4, 300, 340, 350
Replaces: 368183R91, 1975457C2

Parking Brake Band

S.57794

Fits: 454, 464, 474, 574, 674, 484, 584, 684, 784, 884, Hydro 84, 385, 485, 585, 685, 785, 885, 395, 495, 595, 695, 995
Replaces: 1971050C1

Brake Disc 10”

15 Spline, 2” I.D.

S.57791

Fits: 484, 584, 684, 884, Hydro 84, 385, 485, 585, 685, 395, 495, 595, 695, 895, C50, CX50, C60, CX60, C70, CX70, C80, CX80, C90, CX90, C100, CX100, 3220, 4210, 4230, 4240
Replaces: 114622C2

Cable - Parking Brake

S.59557

Fits: 5120, 5130, 5140, 5220, 5230, 5240, 5250
Replaces: 1531948C1

Brake O-Ring Kit

S.57725

Fits: 484, 584, 684, 884, Hydro 84, 385, 485, 585, 685, 395, 495, 595, 695, 895, 3220, 4210, 4230, 4240
Replaces: 539535R91

Brake Master Cylinder

Fits: (585, 685, 885, W/Cab) (3230, 4210, 4230, 4240,W/Cab) 5120, 5130,5140, 5220, 5230, 5240, CX50, CX60, CX70, CX80, CX90, MX80C, MX90C,MX100, MX100C, MX110, MX120, MX135

S.57294

Replaces: 1287734C91, 1287734C92, 2263301A1

S.56968 Seal Kit

Replaces: 1288229C1

Cable - Parking Brake

S.57307

Fits: MX80C, MX90C, MX100, MX100C, MX110, MX120, MX135
Replaces: 220448A6

Repair Kit

Brake Master Cylinder

S.56966

Fits: 484, 584, 684, 784, 884, Hydro 84, (385 w/ 2 Port Master Cylinder)
Replaces: 3125824R1

Brake Master Cylinder

Fits: (385 SN 5001 ~ 5287, SN 18001 ->), 395, 495, (585, 685, 885, 895, 995 L/Cab) (3220, 4210, 4230, 4240, L/Cab), C50, C60, C70, C80, C90

S.73145

Replaces: 1287843C91, 1287843C92

S.56967 Seal Kit

Replaces: 1288228C1

All parts are aftermarket parts and are not manufactured by the Original Equipment Manufacturer.

CASE/IH

Independent PTO Clutch Kit

(4 Friction, 6 Steel, 6 Springs, 2 Piston Seals)

S.56952

Fits: 454, 574, 2400, (2500 ->SN 100000)
Replaces: 534934R92

Independent PTO Clutch Kit

Heavy Duty (5 Friction Plates, 6 Steel Plates, 6 Springs, 2 Piston Seals)

S.56855

Fits: 884, 895, 995, 4210, 4230, 4240, C50, C60, C80, C90, C100
Replaces: 3125257R91

PTO Shaft - 540 RPM

S.67890

Fits: **Farmall:** (806 SN 23001->), **IH:** (806 SN 5701->), 1026, 856, 766, 966, 1066, 786, 886, 1086, 3088, 3288, 3388, 3488, 3688, 6388, Hydro 100, Hydro 186, Ind. (2806 SN 23001->), (2806 SN 5701->), 2856
Replaces: 401716R3, 401717R3, 401724R1, 402571R1

PTO Output Shaft

1 3/8" x 6 Spline

S.17254

Fits: Farmall 65C, Farmall 75C, Farmall 85C, Farmall 95C, JX55, JX60, JX65, JX70, JX70U, JX80, JX80U, JX85, JX90, JX95, JX1060C, JX1070C, JX1070N, JX1075C, JX1075N, JX1080U, JX1085U, JX1090U, JX1095C, JX1095N
Replaces: 5185602, 5149243

PTO Shaft - 540 RPM

Reversable, 1 3/8" - 6 X 1 3/8" - 21, 10 15/16" Long, 32 Center Splines

S.260212

Fits: 5120, 5130, 5140, 5220, 5230, 5240, 5250, MX80C, MX90C, MX100, MX100C, MX120, MX135
Replaces: 226824A2

Hydraulic Pump - 17 gpm

Reversable, 1 3/8" - 6 X 1 3/8" - 21, 10 15/16" Long, 32 Center Splines

S.65459

Fits: 504, 2504, 606, 706, 806, 1206, 2606, 2706, 2806, 826, 1026, 2826, 340, 544 2544, 456, 656, 756, 856, 1256, 1456, 2656, 2756, 2856, 460, 560, 660, 664, 666, 766, 966, 1066, 1466, 686, 786, 886, 986, 1086, 1486, 1586, Hydro 70, 86, 100, 186
Replaces: 70933C91, 70935C91

Hydraulic Pump

S.57798

Fits: 395, 485, 495, 595, 695, 895, 995, 3220, 3230, 4210, 4230, 4240, C50, CX50, C60, CX60, C70, CX70, C80, CX80, C90, CX90, C100, CX100
Replaces: 93835C92

Independent PTO Clutch Kit

Standard Duty (5 Friction Plates, 8 Steel Plates, 6 Springs, 2 Piston Seals)

S.56951

Fits: 454, 464, (574 SN 1000001->), 674, 484, 584, 684, 784, H84, 385, 485, 585, 685, 885, 395, 4210, 3220, 3230, 4230, C50, C60, 2400, (2500 SN 100001->)
Replaces: 66193C91

Switch - PTO

S.56241

Fits: JX1070N, JX1075N, JX1095N
Replaces: 83952126

PTO Shaft - 540 RPM

S.74659

Fits: MX100, MX110, MX120, MX135
Replaces: 226823A1

PTO Output Shaft

1 3/8" X 21 Spline

S.17397

Fits: Farmall 65C, Farmall 75C, Farmall 85C, Farmall 95C, JX55, JX60, JX65, JX70, JX70U, JX80, JX80U, JX85, JX90, JX95, JX1060C, JX1070C, JX1070N, JX1075C, JX1075N, JX1080U, JX1085U, JX1090U, JX1095C, JX1095N
Replaces: 5185601, 5149242

Hydraulic Pump

S.57841

Fits: Super A, C, Super C, 100, 130, 140, 200, 230 All with Touch-Contro
Replaces: 360689R91 384506R94

Hydraulic Pump (7.6 G.P.M.)

S.57797

Fits: B275, 354, 364, 384, B414, (424 Diesel w/ Manual Steering), (444 Diesel w/ Manual Steering), Ind. 2424, (2444 Diesel w/ Manual Steering)
Replaces: 704330R91, 704330R95, 3072694R91

Hydraulic Pump Assembly

S.149233

Fits: JX70U, JX80U, JX90U, JX100U, JX1060C, JX1070C, JX1075C, JX1080U, JX1090U, JX1100U
Replaces: 5180275, 5167394

CASE/IH

Filter - Hydraulic Oil

(OD=5", ID=2 15/16", Ht=3")

S.76268

Fits: 454*, 464, 574*, 674, 484, 584, 684, 784, 884, (385 SN 5288~18000), (485, 585, 685, 785 ->12/85), Hydro 84, Ind. 248, 258, 268, 278, 2400, 2500 (*Synchromesh)
Replaces: 530144R92

Filter - Hydraulic Transmission Oil

(D=5 1/16", ID=1 1/2-16 Thd, Ht=6 5/8")

S.118332

Fits: 5120, 5130, 5140, 5220, 5230, 5240, 5250, MX80C, MX90C, MX100, MX100C, MX110, MX120, MX135
Replaces: 1976934C4

Filter - Hydraulic

(OD 5 3/8", 1 3/4" Thread, 6 1/2" Long)

S.66940

Fits: (Farmall 85U, 95U, 105U), JX1080U, JX1090U, JX1100U
Replaces: 5174044

Remote Coupler

1 per Snap Pack

S.119942

Fits: (Farmall 65C, 75C, 85C, 95C), JX1070C, JX1070N, JX1075C, JX1075N, JX1085C, JX1095C, JX1095N
Replaces: 5179557

Leveling Box Assemblies

S.14875

(19 1/4" Min, 24" Max, A=1", Narrow Link - STD, 3/4" Pin Hole)

Fits: 276, 354, 385, 364, 384, 424, B414, 434, 444, 454, Ind. 2424, 2300, 2444
Replaces: 3069056R91

S.14874

(22 3/4" Min, 28" Max, A=1", 3/4" Pin Hole)

Fits: 474, 475, 574, 584, 674, 684, 784, 884
Replaces: Non-Original Type

Filter - Hydraulic Oil

w/ Seals (OD=5 1/16", ID=2 11/16", Ht=3")

S.76270

Fits: (385 SN 5001~5287, 18001->), (485, 585, 685 86->), 885, 395, 495, 595, 695, 895, 4210, 3220, 3230, 4230, 4240, C50, C60, C70, C80, C90, CX50, CX60, CX70, CX80, CX100, Ind. 380B
Replaces: 93413C1

Filter - Hydraulic w/ Seals

(OD=5.07", Ht=8.03")

S.109695

Fits: C50, CX50, C60, CX60, C70, CX70, C80, CX80, CX90, C100, CX100
Replaces: 295950A1, 431145A1

Filter - Hydraulic

(OD=3.70", 1 3/8"-12 Thread, Ht=6.37")

S.76699

Fits: MX180, MX220, MX240, MX270
Replaces: 294721A1, 82003166

Female Coupler

Can connect with residual pressure on female coupler & male tip. As is a breakaway coupler

NEW ITEM

S.130752

Fits: 5120, 5130, 5140, 5150, 5220, 5230, 5240, 5250
Replaces: 93177C5, 93177C4, 93177C3, 93177C2, 93177C1

Hydraulic Female Coupler

Push/Pull (Breakaway) Use 8010-4P Male Tip (Size: 1/2" Body, Thread: M22 x 1.5 Male)

S.3049 - Parker Brand

S.112642 - Faster Brand

Fits: MF 360, 362, 375, 383, 390, 390T, 393, 396, 398, 399, 3090, 3120, 3630, 3650, 3660, 3680,
Replaces: 3384874M4, 1696241M92, 3384873M4

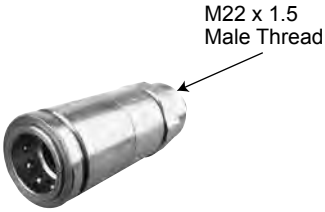

Top Links, Cat II

Fits: 5120, 5130, 5140, 5220, 5230, 5240, 5250, MX80C, MX90C, MX100, MX100C, MX120, MX135

S.99505 - Tube Length 15", Min. 23 1/8", Max. 32 1/2"

S.13993 - With Claw End, Tube Length 15", Min. 26 5/8", Max. 36", Uses Cat II Ball 33008 in Hook

S.28204 - Tube Length 19", Min. 24 3/8", Max. 35 5/8"

Replaces: 1348047C1, 311795A1

All parts are aftermarket parts and are not manufactured by the Original Equipment Manufacturer.

CASE/IH

Small Implement Carrier

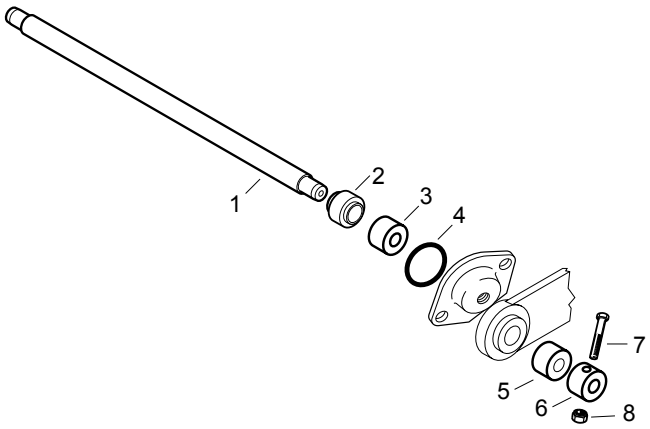

1- Stabilizer Sensing Shaft

S.108622

Fits: Farmall 65C, Farmall 75C, Farmall 85C, Farmall 95C, JX1060C, JX1070C, JX1075C, JN1075N, JX1085C, JX1095C, JX1095N
Replaces: 5180482

2- Bushing

S.59127

Fits: Farmall 65C, Farmall 75C, Farmall 85C, Farmall 95C, JX1060C, JX1070C, JX1075C, JN1075N, JX1085C, JX1095C, JX1095N
Replaces: 5116244

3- Seal

S.62369

Fits: Farmall 65C, Farmall 75C, Farmall 85C, Farmall 95C, JX1060C, JX1070C, JX1075C, JN1075N, JX1085C, JX1095C, JX1095N
Replaces: 47129342, 47124792

4- O-Ring

S.8917

Fits: Farmall 65C, Farmall 75C, Farmall 85C, Farmall 95C, JX1060C, JX1070C, JX1075C, JN1075N, JX1085C, JX1095C, JX1095N
Replaces: 14459781

5- Spacer

S.108525

Fits: Farmall 65C, Farmall 75C, Farmall 85C, Farmall 95C, JX1060C, JX1070C, JX1075C, JN1075N, JX1085C, JX1095C, JX1095N
Replaces: 5131391

6- Ring w/ Hole

S.108523

Fits: Farmall 65C, Farmall 75C, Farmall 85C, Farmall 95C, JX1060C, JX1070C, JX1075C, JN1075N, JX1085C, JX1095C, JX1095N
Replaces: 5116247

7- Bolt (M10 x 1.25-60)

S.51513

8- Lock Nut (M10 x 1.25)

S.53837

CASE/IH

Large Implement Carrier

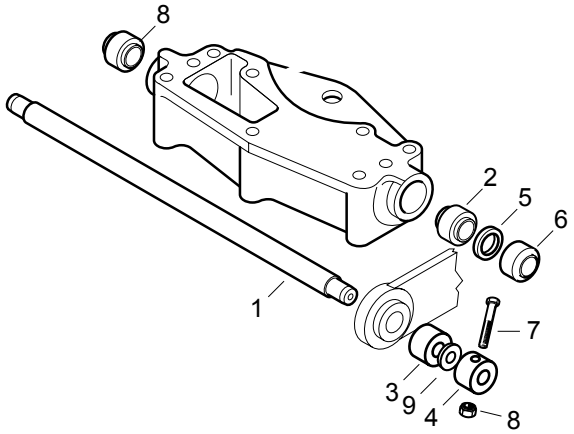

1- Stabilizer Sensing Shaft

S.62368

Fits: Farmall 85U, Farmall 90, Farmall 95U, JX55, JX60, JX65, JX70, JX70U, JX75, JX80, JX80U, JX85, JX90, JX90U, JX95
Replaces: 5116243

1- Stabilizer Sensing Shaft

S.62539

Fits: Maxxum 100, Maxxum 110, Maxxum 115, Maxxum 125, MXU100, MXU110, MXU115, MXU125, MXU130
Replaces: 5111458

2- Bushing

S.59127

Fits: Farmall 85U, Farmall 90, Farmall 95C, Farmall 95U, JX55, JX60, JX65, JX70, JX70U, JX75, JX80, JX80U, JX85, JX90, JX90U, (JX95 -> 1/06), JX1080U, JX1090U
Replaces: 5116244

2- Bushing

S.108517

Fits: Farmall 95, Farmall 105U, JX95, Farmall 95, Farmall 105U, (JX95 1/06->), JX100U, JX1100U, MXU100, MXU110, MXU115, MXU125
Replaces: 5109977

3- Spacer

S.108521

Fits: Farmall 85U, Farmall 90, Farmall 95U, JX55, JX60, JX65, JX70, JX70U, JX75, JX80, JX80U, JX85, JX90, JX90U, JX95, JX1080U, JX1090U
Replaces: 5116246

4- Ring w/ Hole

S.108523

Fits: Farmall 85U, Farmall 90, Farmall 95, Farmall 95U, Farmall 105U, JX55, JX60, JX65, JX70, JX70U, JX75, JX80, JX80U, JX85, JX90, JX90U, JX95, JX100U, JX1080U, JX1090U, JX1100U
Replaces: 5116247

4- Ring w/ Hole

S.108522

Fits: Maxxum 100, Maxxum 110, Maxxum 115, Maxxum 125, MXU100, MXU110, MXU115, MXU125, MXU130
Replaces: 5109989

5- Seal

S.62800

Fits: Farmall 95, Farmall 105U, JX95, Maxxum 100, Maxxum 110, Maxxum 115, Maxxum 125, Maxxum 130
Replaces: 5127037, 47129340

5- Seal

S.62369

Fits: Farmall 85C, Farmall 85U, Farmall 90, Farmall 95C, Farmall 95U, JX55, JX60, JX65, JX70, JX75, JX80, JX85, JX90, JX95, JX1080U, JX1090U
Replaces: 47129342, 47124792

6- Spacer

S.62547

Fits: Farmall 70U, Farmall 80U, Farmall 85U, Farmall 90, Farmall 90U, Farmall 95U, Farmall 1080U, Farmall 1090U, JX55, JX60, JX65, JX70, JX70U, JX80, JX80U, JX90, JX90U, (JX95->1/04)
Replaces: 5116245

6- Spacer

S.108513

Fits: Farmall 95, Farmall 105U, JX95, JX100U, JX110U, Maxxum 100, Maxxum 110, Maxxum 115, Maxxum 125, MXU100, MXU110, MXU115, MXU125, MXU130
Replaces: 5171675

7- Bolt (M10 x 1.25-60)

S.51513

8- Lock Nut (M10 x 1.25)

S.53837

9- Washer

(1 3/16" x 1 5/8" x 1/2")

S.108524

Fits: Maxxum 100, Maxxum 110, Maxxum 115, Maxxum 125, MXU100, MXU110, MXU115, MXU125, MXU130
Replaces: 5111451

All parts are aftermarket parts and are not manufactured by the Original Equipment Manufacturer.

CASE/IH

Starter - Diesel Only

(27420 / LRS 172) 26288

S.129411

Fits: B275, 354, 364, 384, B414, 434, B444, Ind. 2300, 2350A
Replaces: 3046890R93

Starter (6 Volt)

S.57830

Fits: (H, SN 501~391357), M Gas, (Super M, SN F501-F28174, L500001~L504801) Gas
Replaces: 63608D, 1107448

Starter (6 Volt)

S.67282

Fits: H, M, 100, 130, 140, 240, 330, 340
Replaces: 1868804

Alternator Conversion Kit

S.67693

Fits: Farmall: H, M

Voltage Regulator

(6 Volt - 4 Terminal)

S.43246

Fits: Cub, Cub LoBoy, Super A, C, Super C, H, Super H, M, Super M, Super MTA, I-4, I-6, I-9, O-4, W4, W6, W9, WR9, 100, 130, 140, 200, 230, 240, 300, 330, 340, 350, 400, 450
Replaces: 121578C1, 354234R91, 360898R91

Switch - Starter

Push Button

S.67908

Fits: **Case:** D, DA, L, R, V, VC, IH: H, M
Replaces: 107497C1

Neutral Start Switch

S.7868

Fits: 354, 384, B414, 474, 495, 584, 595, 684, (685->1986), 695, 785, 885, (3220, 3230, 4210, 4230, 4240 L/2 Speed Powershift)
Replaces: 3114409R92, 3072122R93, 81712538

Starter (6 Volt)

NEW, Not Rebuilt!

S.70732

Fits: C, Super A, Super C, 100, 130, 140, 200, 230, 240
Replaces: 251384R91, 355794R91, 1107067, 1107093, 1108096

Starter

S.129412

Fits: 454, 474, 574, 674, 484, 584, 684, 784, 884, 385, 485, 485XL, 585, 585XL,685, 685XL, 785, 785XL, 885, 885XL, 985XL, 395, 495, 495XL, 595, 595XL, 695, 695XL, 795, 795XL, 895, 895XL, 995XL, 2310, 3220, 3230, 4210, 4220, 4230, 4240, 84 Hydro
Replaces: 114568A1, 230428A3

Flywheel Ring Gear

S.163151

Fits: MAXXUM 100, MAXXUM 110, MAXXUM 115, MAXXUM 120, MAXXUM 125, MAXXUM 130, MAXXUM 140, MXU100, MXU115, MXU125, MXU130, MXU135, PUMA 115, PUMA 125, PUMA 140, PUMA 155, PUMA 165, PUMA 180, PUMA 195, PUMA 210
Replaces: 4895353

Alternator

14 Volt, 95 Amp

S.361711

Fits: 1896, 2096, 5120, 5130, 5140, 5220, 5230, 5240, 5250, MX80C, MX90C, MX100, MX100C, MX110, MX120, MX135, MX150, MX170
Replaces: A187623

Voltage Regulator

(12 Volt - 4 Terminal)

S.43247

Fits: Cub, Cub LoBoy, 140, 460, 560 (330, 340 Diesel) 660
Replaces: 376122R91, 121577C1

Switch - Starter

S.65603

Fits: Cub, Cub Loboy, A, B, C, Super A, Super C, Super H, Super M, 100, 130, 140, 200, 230
Replaces: 1918405

Relay

Safety Start Switch, 70 Amp.

S.65443

Fits: 3220, 3230, 4210, 4230, 4240, (5120, 5130, 5140, 5220, 5230, 5240, 5250 SN JJF1030000 ->), CX50, CX60, CX70, CX80, CX90, CX100, MX100, MX110, MX120, MX135
Replaces: 1987452C1

CASE/IH

Tune-up Kits

(Points, Condenser, Rotor, 4 Autolite 386 Plugs)

S.56919

Fits: 4 Cylinder Engines w/ Battery Ignition IH Distributor (1951-1962)

S.56920

Fits: 4 Cylinder Engines w/ Battery Ignitionm IH Distributor (1963->)

Distributor Caps

S.61907 - Delco Clip Held

Fits: B414, 200B, 300B, 400B, 500B, 600B w/ Delco Distributors
Replaces: 811735

S.56918

Fits: IH B, H, M (w/ 4 Cylinder Engines w/ Battery Ignition or J4 Magneto)
Replaces: 351693R92

S.42934 - Autolite Distributor

Fits: S, VA, 200B, 210, 210B, 300, 300B, 320, 350, 400, 400B, 430, 435LCK, 440, 450, 470, 480CK, 500, 500B, 530, 535LCK, 540, 540C, 580CK, Forklift, 600, 640, 640C
Replaces: IG1324

Distributor Cap

For H4 Magneto

S.68430

Fits: A, B, C, H, M, Super A, Super C, Super H, Super M, 200, 230, 240, 300, 330, 340, 350, 400, 450 w/ H-4 Magneto
Replaces: 47413DYC

Distributor Cap

S.152769

NEW ITEM

Fits: 460, 560, 606, 660, 666, 686, 706, 756, 766, 806, 826, 856, Hydro 70, Hydro 86, Ind. 2606, 2656, 2706, 2756, 2806, 2856, 3616
Replaces: 368062R91

Ignition Kits w/ Distributor

(Points, Condenser, Rotor)

S.56921

Fits: 4 Cylinder Engines w/ Battery Ignition IH Distributor (1951-1962)

S.56922

Fits: 4 or 6 Cylinder Engines w/ Battery Ignition IH Distributor (1963->)

S.61558

Fits: Delco Distributor w/ Clip Held Cap
Case -300B, 400B, 500B, 600B,
Industrial - 320B, 420B, 420DB, 310C, 420C

S.42933- w/ Autolite Distributor

Fits: S, VA, 300, 300B, 400B, 500B, 600B, 700, 800, 320, 320B, 420B, 530, 540, 540C, 580CK, 600, 640C, 580 (w/ IAD60032F Distributor)

Ignition Kit w/ H-4 Magneto

(Points, Condenser, Rotor)

S.68427

Fits: A, B, C, H, M, Super A, Super C, Super H, Super M, 200, 230, 240, 300, 330, 340, 350, 400, 450 w/ H-4 Magneto
Replaces: 361581R91, 351447R91, 353242R92

Custom Spark Plug Wire Set

S.67475

Fits: Cub, A, Super A, B, BN, C, Super C, H, Super H, M, Super M, MTA, 300, 350, 400, 450

MADE IN USA

Universal Spark Plug Wire Sets

4 Cylinder - HIGH QUALITY

S.2097 w/ Straight Boots

S.66442 90° Boots

MADE IN USA

Universal Spark Plug Wire Sets

6 Cylinder - HIGH QUALITY

S.22679 w/ Straight Boots

S.66465 90° Boots

MADE IN USA

All parts are aftermarket parts and are not manufactured by the Original Equipment Manufacturer.

CASE/IH

Ignition Switch

Push/Pull (Out=Run, In=Stop) w/ Magneto - 1 Terminal

S.67595

Fits: Cub, Cub LoBoy A, B, C, H, M, 100, 130, 140, 200, 230, 300, 350, 400
Replaces: 54207DB

Starter Switch

S.41123

Fits: 454, 474, 475, 574, 674, 484, 584, 684, 784, 884, 385, 485, 585, 685, 785, 885, 395, 495, 595, 695, 795, 895, 1294, 1394, 1494, 1594, 3210, 3220, 3230, 4210, 4220, 4230, 4240, Ind. 238, 248, 258, 268, 288,
Replaces: 3107556R92

Key S.3990

Ignition Switch w/ Keys

S.152735

NEW ITEM

Fits: (140 W12 Volt System), (Cub SN239827 - 248124), (Cub LoBoy 154 -> SN14535) Cub LoBoy 184, 185, Cub Cadet 70, 71, 72, 73, 100, 102, 104, 105, 106, 107, 108, 122, 123, 124, 125, 126, 127, 147
Replaces: 60736C2

Switch, Push Button Start

S.152759

NEW ITEM

Fits: (Starter Button only 444), (Starter and Ether - 544, 664, 686, 756, 766, 826, 856, 966, 1066, 1256, 1456, 1466, 1468, 1566, 1568, Hydro 70, Hydro 86, Hydro 100, Hydro 186), (Ether Only - 385, 395, 454, 464, 484, 485, 495, 574, 584, 585, 595, 674, 684, 685, 784, 885), (Horn and Ether - 685, 695, 786, 885, 886, 895, 995, 996, 1086, 1486, 1586, 3088, 3288, 3388, 3488, 3588, 3688, 3788, 4386, 5088, 5288, 5488, 6388, 6588, 6788, Ind. (Starter - 2444)
Replaces: 397940R93

Switch, Hazard Flasher

S.107599

NEW ITEM

Fits: Farmall 85U, Farmall 95U, Farmall 105U, JX70U, JX80U, JX90U, JX100U, JX1080U, JX1090U, JX1100U
Replaces: 5145664, 87309255, 87387387

Ignition Switch

Push/Pull (Out=Run, In=Stop) w/ Distributor - 2 Terminals

S.67596

Fits: Cub, Cub LoBoy A, Super A, B, C, Super C, H, Super H, M, Super M, (140 6 Volt), 200, 230
Replaces: 62801DC

Ignition Switch w/ Keys

S.152733

NEW ITEM

Fits: 354 Gas, 385, 395, B444 Gas, 454, 464, 484, 485, (574 -> SN114908), (584 L/Cold Start), (595 L/Cab), 674 -> SN108104), 684, (685, 695 L/Cab), 784, 884, (885, 895, 995 L/Cab), Hydro 84, Ind. 2400A, 2500A
Replaces: 529800R91

Switch, Push Button Start

S.152758

NEW ITEM

Fits: 230, 240, 300, 330, 340, 350, 400, 450, 404, 424, 450, 460, 504, 560, 606, 656, 660, 706, 806, Ind. 2404, 2424, 2504, 2606, 2706, 2806
Replaces: 366317R93, A36948

Relay - 30 Amp.

S.57345

NEW ITEM

Fits: 230, 240, 300, 330, 340, 350, 400, 450, 404, 424, 450, 460, 504, 560, 606, 656, 660, 706, 806, Ind. 2404, 2424, 2504, 2606, 2706, 2806
Replaces: 366317R93, A36948 Fits: (585, 595, 685, 695, 885, 895 995 AC Blower), 2394, 2594, 3088, 3220, 3230, 3288, 3394, 3594, 3688, 4210, 4220, 4230, 4240, 4386, 4586, 4786, 5088,(5120, 5140, 5220, 5230, 5240, 5250 Power Shift), 5288, 5488, 6388, 6588, 6788, 7110, 7120, 7130, 7150, 7210, 7220, 7230, 7240, 7250, 7288, 7488, 8910, 8920, 8930, 8940, 8950, 9310, 9330, 9350, 9380, 9390, Magnum 215, Magnum 245, Magnum 255, Magnum 275, Magnum 285, Magnum 305, MX210, MX215, MX230, MX245, MX255, MX275, MX285, MX305
Replaces: 146461C1, 1983394C2

Flasher Control Switch

S.152311

NEW ITEM

Fits: 385, 970, 1070, 1175, 1270, 1370, 1570, 1896, 2090, 2094, 2096, 2290, 2294, 2390, 2394, 2470, 2590, 2594, 2670, 2870, 3294, 3394, 3594, 4494, 4690, 4890, 4894, 7110, 7120, 7130, 7140, 7150, 7210, 7220, 7230, 7240, 7250, 8910, 8920, 8930, 8940, 8950
Replaces: 131066C91, 87271837, 131209C91

Light Switch w/ Resistor

S.152744

NEW ITEM

Fits: (Cub, Cub LoBoy, 100, 130, 140 6 Volt System), Super A, Super C, (240, 300, 330, 340, 350, 400, 450 W/6 Volt System)
Replaces: 371464R91

Light Switch w/ Resistor

S.152746

NEW ITEM

Fits: MD 12 Volt w/Regulator, (340, 350, 400, 450 12 Volt System), 460, 560, 660
Replaces: 371465R91

Light Switch w/ Resistor

S.152747

NEW ITEM

Fits: (Cub 154 LoBoy - 12Volt), Cub LoBoy 184, 185, 354, 364, 404, 444, B444, 454, 464, 504, (574 -> SN114908), 606, 656, (674 -> SN108104), 706, 806, 1206, Ind. 2400A, 2404, 2424, 2444, 2504, 2606, 2656, 2706, 2806, 21206
Replaces: 376851R92, 376851R91

CASE/IH

Tractormeter - Clockwise

S.68882

Fits: 560, 660
Replaces: 383093R91, 383092R91, 375679R91

Tractormeter - Clockwise

S.61424

Fits: Farmall 340 (Gas), IH 340 (Gas)
Replaces: 371243R93

Tractormeter - Clockwise

S.61526

Fits: 424, 444, 2424, 2444 (Gas)
Replaces: 388893R9

Oil Gauge

S.56904

Fits: 300, 350 Utility (Diesel), 400, 450 Farmall (Diesel), 460, 560, 660, (D236 Eng)
Replaces: 362177R94, 536962R2

Ammeter

6 or 12 Volt

S.68885

Fits: 766, 966, 1066, 1466, 1566, 4366, 1468, 1568, 4658, Hydro 100
Replaces: 533990R1, 1341322C1, 84203117

Tractormeter

S.119905

Fits: (544, 656, 666, 826, 966, 1026, 1066 Hydro models), Hydro 70, Hydro 86, Hydro 100
Replaces: 398957R1, 534055R1, 65324C1

Tractormeter

S.119907

Fits: 766 Diesel, (786, 886, 966, 986, 1066, 1086, 1466, 1486 Gear Transmission)
Replaces: 67679C2, 103151A1

Tractormeter Drive - 90 Degree

S.62653

Fits: JX70U, JX80U, JX90U, JX100U
Replaces: 5109356

NEW ITEM

Tractormeter - Clockwise

S.68881

Fits: 706, 806, 1206, (766 Gas ->SN 10934), Ind. 2706, 2806, 21206
Replaces: 388588R91, 388589R91, 66748C1

Tractormeter - Clockwise

S.61425

Fits: IH 300 Utility, IH 350 Utility
Replaces: 364372R91

Tractormeter - Clockwise

S.61427

Fits: 454, 464, 574 Hydro, 674, 484, 584, 684, 784, 884, 885, Hydro 84, Ind. 2400, 2500A
Replaces: 66455C1, 3125106R92

Gauge Kit

S.65524

Fits: 300 Utility, 350 Utility
Includes: S.61425, S.65521, S.65522, S.65523

Oil Gauge

OEM number on face

S.65522

Fits: 240, 300, 330, 340, 400, 450, (460, 560, 660 D236 Engines)
Replaces: 362039R91

Ammeter - 6 or 12 Volt

OEM number on face

S.65521

Fits: Cub, (Super A, H, M), 100, 130, 140, 200, 230, 240, 300, 330, 340, 350, 400, 450, 460, 560, 600, 650, 660
Replaces: 360053R91

Instrument Cluster, Oil/Temperature

S.119906

Fits: 706, 806, 1206, 2706, 2806, 21206
Replaces: 382732R91, 382732R92, 382732R93, 382732R94

All parts are aftermarket parts and are not manufactured by the Original Equipment Manufacturer.

CASE/IH

Temperature Gauge

S.57858

Fits: 484, 584, 684, 784, 884, 385, 485, 585, 685, 785, 885
Replaces: 3127959R4

Sender S.57873

Temperature Gauge

OEM number on face

S.65523

Fits: A, H, M, Super A, Super M, (300, 350 Utility)
Replaces: 67135D

Temperature Gauge

S.69104

Fits: C, Super C, 200, 230, 240, 300, 340, 350, 400, 450, 460, 560, 660
Replaces: 353868R91, 536960R2

Cluster Gauge

Oil Pressure/Temperature

S.68884

Fits: (766, 966, 1066, 1466, 1566, 4366, 1468, 1568, 4658, Hydro 100, all Diesel)
Replaces: 1546481C1, 534057R2

Fuel Gauge

S.68887

Fits: (460, 560, 660 w/ Stewart Warner Sender), 766, 966, 1066, 1466, 1566, 4366, 1468, 1568, 4658, Hydro 100
Replaces: 533992R1, 378426R91

Note: Will Work on 84/85 Series Tractors. Does Not Look Like Original!

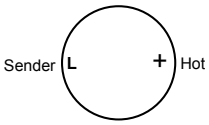

Fuel Sender Unit

S.68886

Fits: 706, 806, 1206, 826, 1026, 544 Gas, 656, 756, 856, 1256, 1456, (460, 560, 660 w/ Stewart Warner Gauge), 766, 966, 1066, 1466, 1566, 1468, 1568, 4658, Hydro 100, Ind. 2706, 2806, 21206, 2826, 2544 Gas, 2656, 2756, 2856, 21256, 21456
Replaces: 5378427R1, 378427R92, 378427R93, 378427R94

Fuel Gauge w/ Sender

S.68888

Fits: 706, 806, 1206, 826, 1026, 544 Gas, 656, 756, 856, 1256, 1456, 460, 560, 660, 766, 966, 1066, 1466, 1566, 1468, 1568, 4658, Hydro 100, Ind. 2706, 2806, 21206, 2826, 2544 Gas, 2656, 2756, 2856, 21256, 21456
Replaces: 5378427R1, 378427R92, 378427R93, 378427R94, 533992R1, 378426R91

Tractormeter Cable (57" Long)

S.57806

Fits: 584, 684, 784, 884, H84
Replaces: 529234R1

Tractormeter Cable (71" Long)

S.57807

Fits: 595, 695, 895, 995, 3220, 3230, 4210, 4230
Replaces: 1500716C1

Switch - Water Temperature

S.57873

Fits: **UK Series -** 238, 248, 258, 268, 288 484, 584, 684, 784, 884,385, 485, 485XL, 585, 585XL, 685, 685XL, 785, 785XL, 885, 885XL,395, 495, 595, 695, 795, 895, 3210 (less Cab), 3220 (less Cab), 3230 (less Cab), 4210 (less Cab), 4220 (less Cab), 4230 (less Cab), 4240 (less Cab) 84 Hydro
Replaces: 3127956R1

Switch - Water Temperature

S.57875

Fits: **UK Series -** 495XL, 595XL, 695XL, 795XL, 895XL, 995XL, 3210 (with Cab), 3220 (with Cab), 3230 (with Cab), 4210 (with Cab), 4220 (with Cab), 4230 (with Cab), 4240 (with Cab) Maxxum - 5120, 5130, 5140, 5150, Case - 2096
Replaces: A187687

CASE/IH

Sealed Beam Bulb - Red Back

12 Volt (4 1/2" Dia.)

S.52670

Fits: 404, 504, 606, 706, 806, 424, 140, 444, 544, 154, 354, 454, 656, 560, 660, 364, 574, 674, 184, 384, 185, 686, 786, 886, 986, 1086, 1486, 1586, 2400, 2404, 2504, 2606, 2706, 2806, 2424, 2444
Replaces: 371461R92

Headlamp Assembly - 6 Volt

S.67873

Fits: Case: VA, VAC, VAH
Replaces: VT3660

Lamp Clamps

Fits: IH & Farmall Tractors
Replaces: 350920R1, 350920R3, 107747H1, 22-164

S.65451 - Steel
S.67866 - Cast

Relay - Headlights

S.22729

Fits: 5120, 5130, 5140, 5220, 5230, 5240, 5250, MX80C, MX90C, MX100, MX100C, MX110, MX120, MX135, MX150, MX170
Replaces: 1502351C1

Headlamp Repair Kit (Primer)

Fits: Cub, Cub LoBoy, A, Super A, B, C, Super C, H, M, Super M, S.61872, S.67762

S.68977 6 Volt
S.68978 12 Volt

Sealed Beam Bulb

Headlight (4 1/2") 12 Volt - Hi/Low Beam, 3 Terminals

S.4277

Fits: 434, 354, 364, 474, 384, 484, 584, 684, 784, 884, Hydro 84, 385, 485, 585, 685, 785, 885
Replaces: 3072947R91

Headlights - 12 Volt Halogen

Bulb S.109975 (55W)

Fits: Models w/ Flat Top Fenders

S.61545 W/ Glare Guard
S.67760 L/ Glare Guard
S.42757 Washer - Dished

LED Cree Headlight Assembly

1260 Lumen, Watts: 6 x 3W (18 Watts) Volts: 10/30 Volt Size: 5" Round, Fender Mounted w/ Nut Concave Washer, Included

S.115004 Flood
S.115005 Trapezoid

Work/Tail Light - 6 Volt (Red)

w/ Switch (12 Volt Bulbs S.51140, S.109966)

S.67566

Fits: Cub, Cub LoBoy, Super A, C, Super C, H, M, Super M, 100, 130, Farmall, 200, 230, 300, 350, 400, 450
Replaces: 355910R91, 355914R91, 361985R92, 361985R93

Switch w/ Knob **S.67467**
Knob Only **S.67817**
Replaces: 375653R92, 359682R91

Headlamp Assembly (Red)

Fits: 100, 130, 140, 200, 230, 240, 300, 350, Farmall 300, 350 Utility, 330, 340, IH & Utility 240, 400, 450, Farmall, Cub-Cub Loboy, Farmall C, M, MV, MD, MDV, Super MD, Super MDV
Replaces: 357884R94

S.60180 6 Volt
S.60262 12 Volt

S.2377 Reflector

S.61890 (6 Volt)
S.5079 (12 Volt)

S.2375 Gasket

S.2376 Lens

S.2378 Ring

Original Style Headlamp Assembly (Red)

Fits: Cub, Cub LoBoy, A, Super A, B, C, Super C, H, M, Super M
Replaces: 53522DA, 53523D, 142309, 53527D, 350478R1, 5939960

S.61872 6 Volt
S.67762 12 Volt

S.66589 Clip

S.66590 Terminal

S.61766 Reflector

S.61890 (6 Volt)
S.5079 (12 Volt)

S.61765 Gasket

S.61876 Lens

S.61875 Ring

All parts are aftermarket parts and are not manufactured by the Original Equipment Manufacturer.

CASE/IH

Gas Strut - Cab Door

S.19418

Fits: 585, 595, 685, 695, 885, 995, 3220, 3230, 4210, 4230, 4240
Replaces: 3232937R1

Gas Strut - Cab Door

S.52912

Fits: 5120, 5130, 5140, 5220, 5230, 5240, 5250, CX50, CX60, CX70, CX80, CX90, CX100, MX80C, MX90C,MX100, MX100C, MX110, MX120, MX135, MX150, MX170
Replaces: 1977416C1

Gas Strut, Rear Window & Opening Windshield

S.52906

Fits: CX50, CX60, CX70, CX80, CX90, CX100, MX80C, MX90C, MX100, MX100C, MX110, MX120, MX135, MX150, MX170
Replaces: 189447A2

Gas Strut - Rear Window

S.19431

Fits: MXM120, MXM130, MXM140, MXM155, MXM175, MXM190
Replaces: 82019393

Worklight, Cab Mounted

S.130540

Fits: Maxxum110, Maxxum115, Maxxum 120, Maxxum125, Maxxum130, Maxxum140, MXU110, MXU115, MXU125, MXU130, MXU135, Puma165, Puma180, Puma195, Puma210
Replaces: 82031078

Rear Light - LH/RH

(7 14" Long, 2 7/8" High, 2 1/4" Deep)
Not Wired, No Bulbs

S.3200

Fits: CX50, CX60, CX70, CX80, CX90, CX100, MX80C, MX90C, MX100, MX100C, MX110, MX120, MX135, MX150, MX170, Ind. Skid Loader: 40XT, 60XT, 70XT, 75XT, 85XT, 90XT, 95XT, 410, 420, 430, 435, 440, 445, 450
Replaces: 177239A2, 259816A1

Bulbs S.5074 & S.5079

Front Light - Parking/Turn LH

(Less Bulbs, 5076, 5079)

S.56367

Fits: CX50, CX60, CX70, CX80, CX90, CX100, MX100, MX110, MX120, MX135, MX150, MX170
Replaces: 224622A2

Front Light - Parking/Turn RH

(Less Bulbs, 5076, 5079)

S.56368

Fits: CX50, CX60, CX70, CX80, CX90, CX100, MX100, MX110, MX120, MX135, MX150, MX170
Replaces: 224621A2

Seat Cushion & Backrest Set

Black/White
3 Mounting Holes on Backrest

S.67200

Fits: **IH:** 424, 544, 656, 664, 2424, 2544, 2656

IH Red/White Seat Pan w/ Cushion

- **4 Bolt Mount**
- **Drain Hole**

S.68477

Fits: **IH:** Cub, Cub LoBoy, C, Super C, H, Super H, M, Super M, 200, 230, 240, (Farmall 300, 340, 350, 400, 450, 460, 650)
Replaces: 351925R93, 357518R91, 354155R92

CASE/IH

Mirror Head. Convex

S.27620

Fits: 5120, 5130, 5140, 5150, 5220, 5230, 5240, 5250
Replaces: 1344062C1, 221737A1, 3399576R91

NEW ITEM

Mirror Assembly

w/ Britax Telescopic Mirror (12 1/2" x 9")

S.39705

Fits: CX50, CX60, CX70, CX80, CX90, CX100, MX80C, MX90C, MX100, MX100C, MX110, MX120, MX135, MX150, MX170, MX180, MX200, MX210, MX220, MX230, MX240, MX255, MX270, MX285, MXM120, MXM130, MXM140, MXM155, MXM175, MXM190, MXU100, MXU110, MXU115, MXU125, MXU130, MXU135
Replaces: 82014587, 297017A1

Air Filter

S.73195

Fits: CX50, CX60, CX70, CX80, CX90, CX100, MX80C, MX90C, MX100, MX100C, MX110, MX120, MX135, MX150, MX170
Replaces: 248124A1, 87761808

NEW ITEM

Blower Motor Assembly

S.106816

Fits: Farmall 85U, Farmall 95U, Farmall 105U, JX70U, JX80U, JX90U, JX100U, JX1080U, JX1090U, JX1100U
Replaces: 82002761

NEW ITEM

Mirror - Convex

12 1/4" x 8 7/8"
Clamps on 5/8" - 1" Dia. Tube, Manual Adjust

NEW ITEM

S.56846

Fits: CX50, CX60, CX70, CX80, CX90, CX100, (Magnum MX100, MX110, MX120, MX135, MX150, MX170, 215, 245, 275, 305, 335 -> SN Z7RZ01152 W/Extendable Arms), STX275, STX280, STX325, STX330, STX375, STX380, STX425, STX430, STX440, STX450, STX480, STX500, STX530
Replaces: 365414A1

Mirror Head

S.118418

Fits: (JX70U, JX80U, JX90U, JX100U W/Chassis C4899)
Replaces: 5165333

Door Latch - LH Inner

S.20931

Fits: 1194, 1294, 1394, 1494, 1594, 5120, 5130, 5140, 5220, 5230, 5240, 5250, CX50, CX60, CX70, CX80, CX90, CX100, MX80C, MX90C, MX100, MX100C, MX110, MX120, MX135, MX150, MX170
Replaces: K303805, 87639168

NEW ITEM

IH Emblem w/ Screws

Red/White/Black Plastic
(3 1/4" High x 2 3/4" Wide)

S.67633

Fits: Most Models
Replaces: 275184R1

Grille w/ Screen

(less Mounting Screws)

S.67423

Fits: 354, 364, 454, 464, Ind. (574, 674, Ind, LoBoy, Grove Models), 2300, 2500
Replaces: 537496R1

All parts are aftermarket parts and are not manufactured by the Original Equipment Manufacturer.