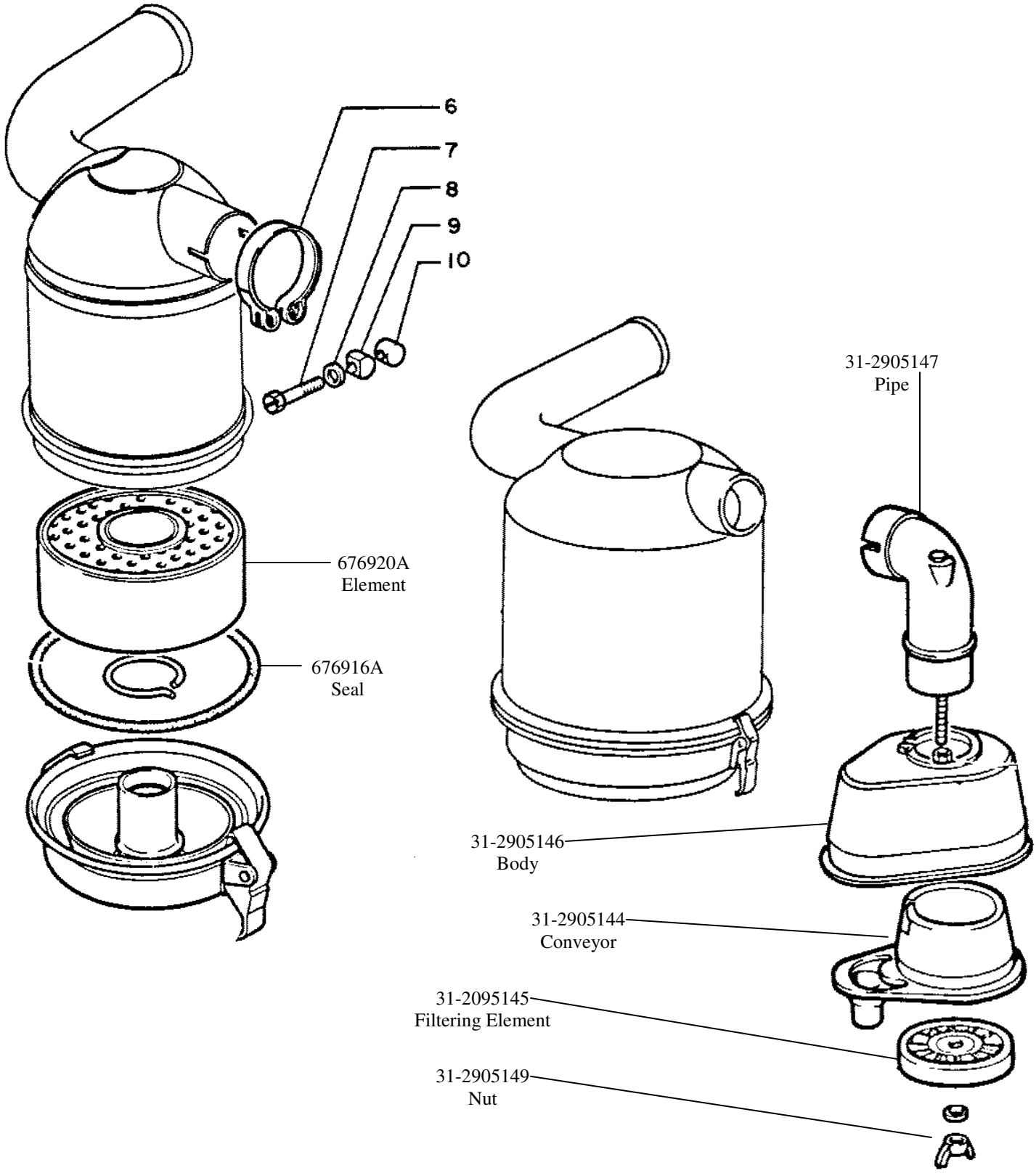

www.RicksAgParts.com
INFO@RicksAgParts.com www.PartsForOlivers.com

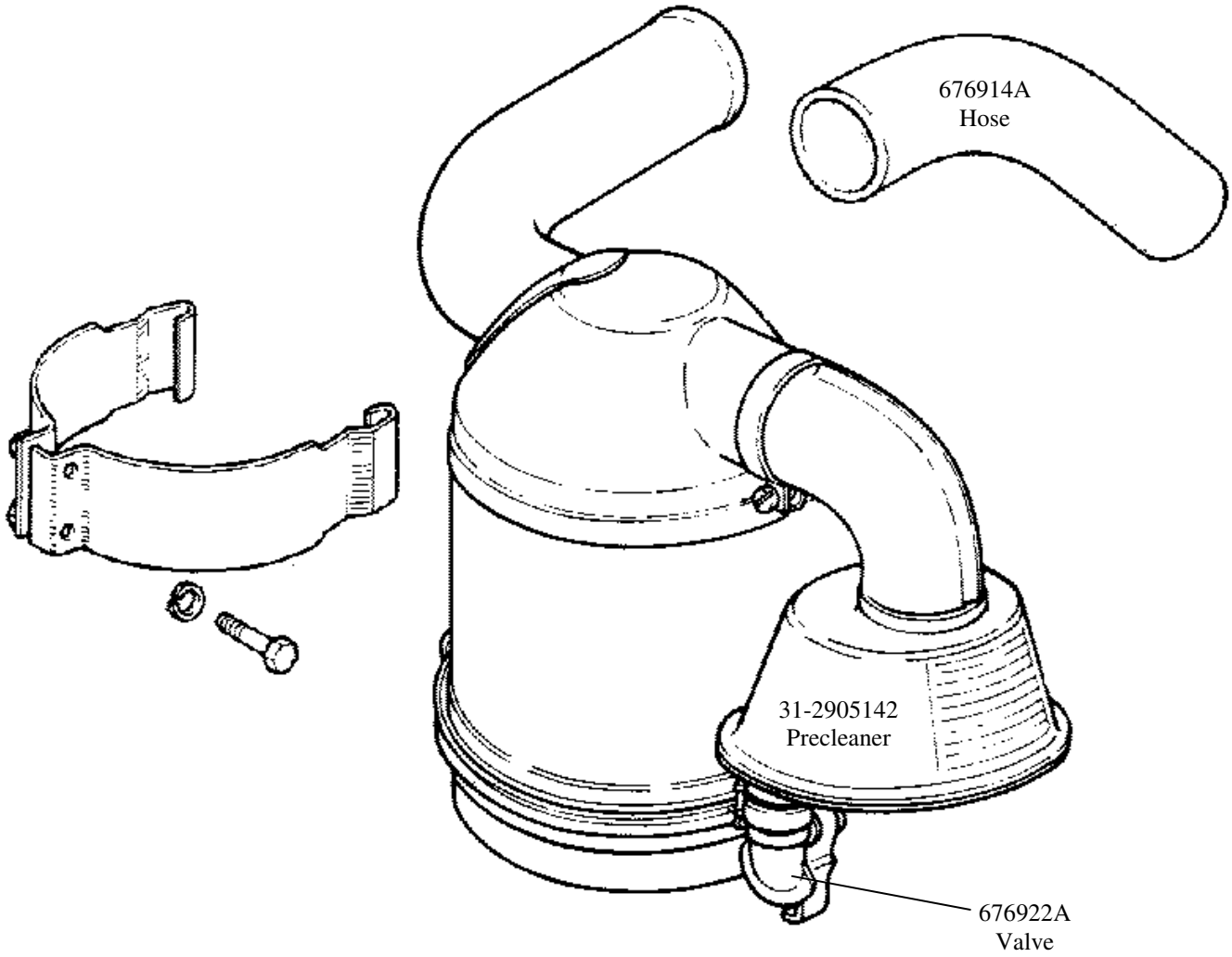
676914A
Hose
31-2905142
Precleaner
676922A
Valve

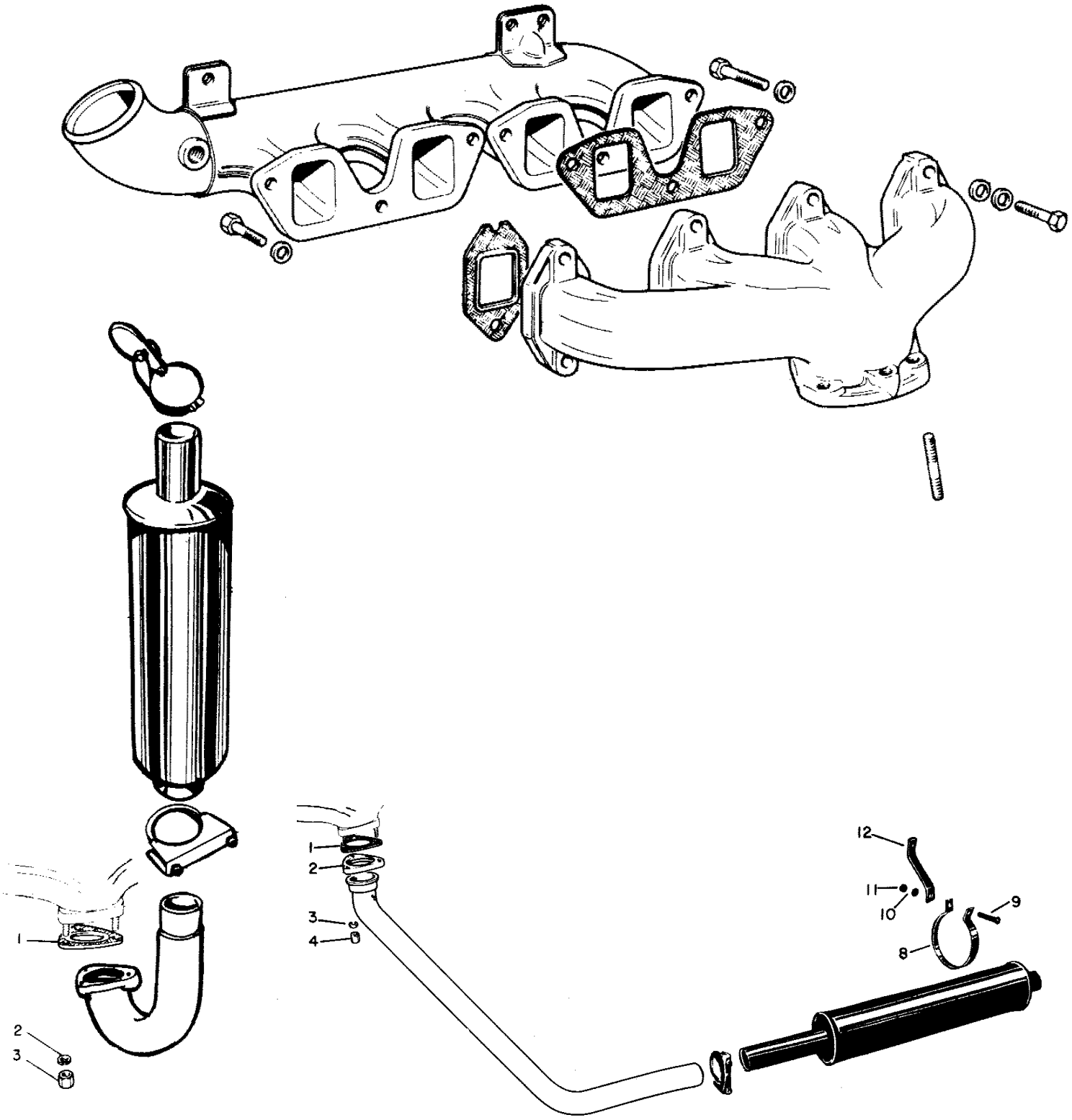
1
2
3
4
1
2
3
12
11
10
9
8

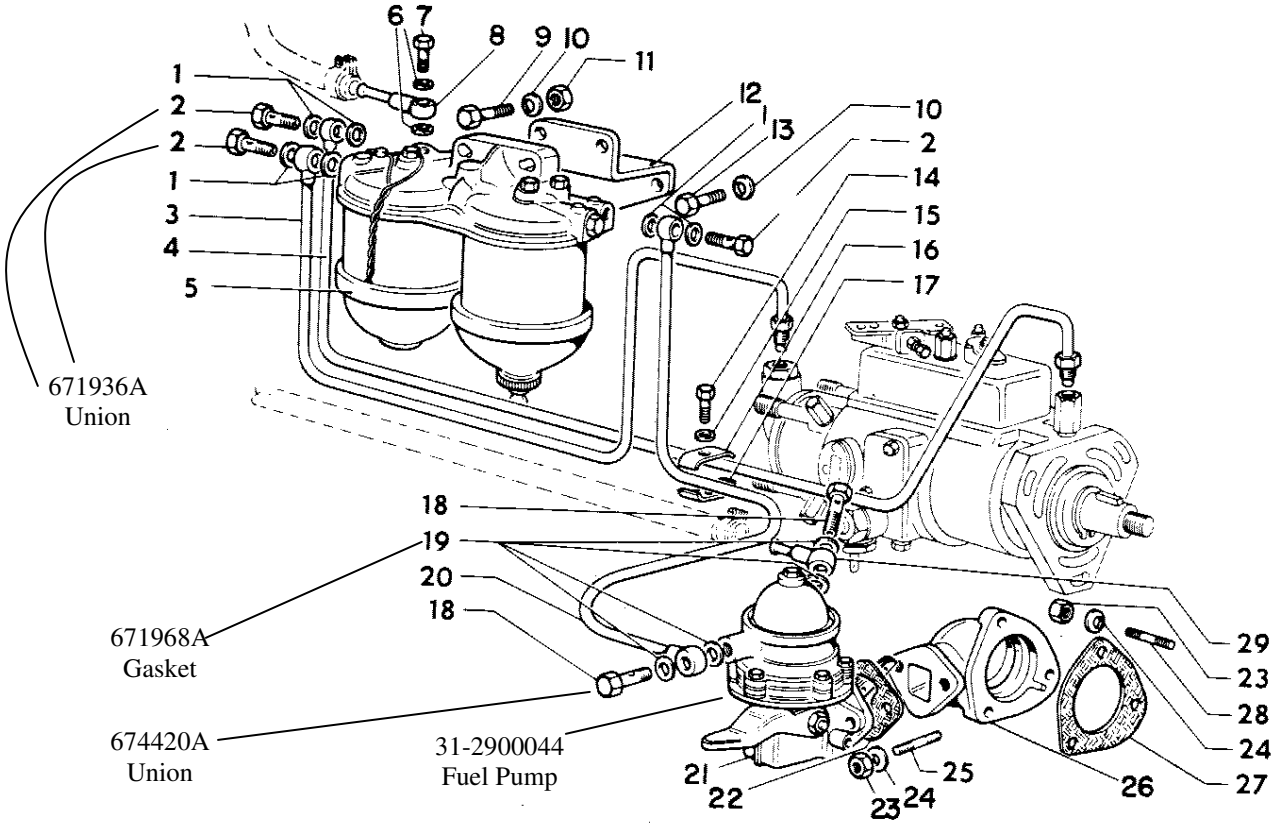
671936A
Union
671968A
Gasket
674420A
Union
31-2900044
Fuel Pump

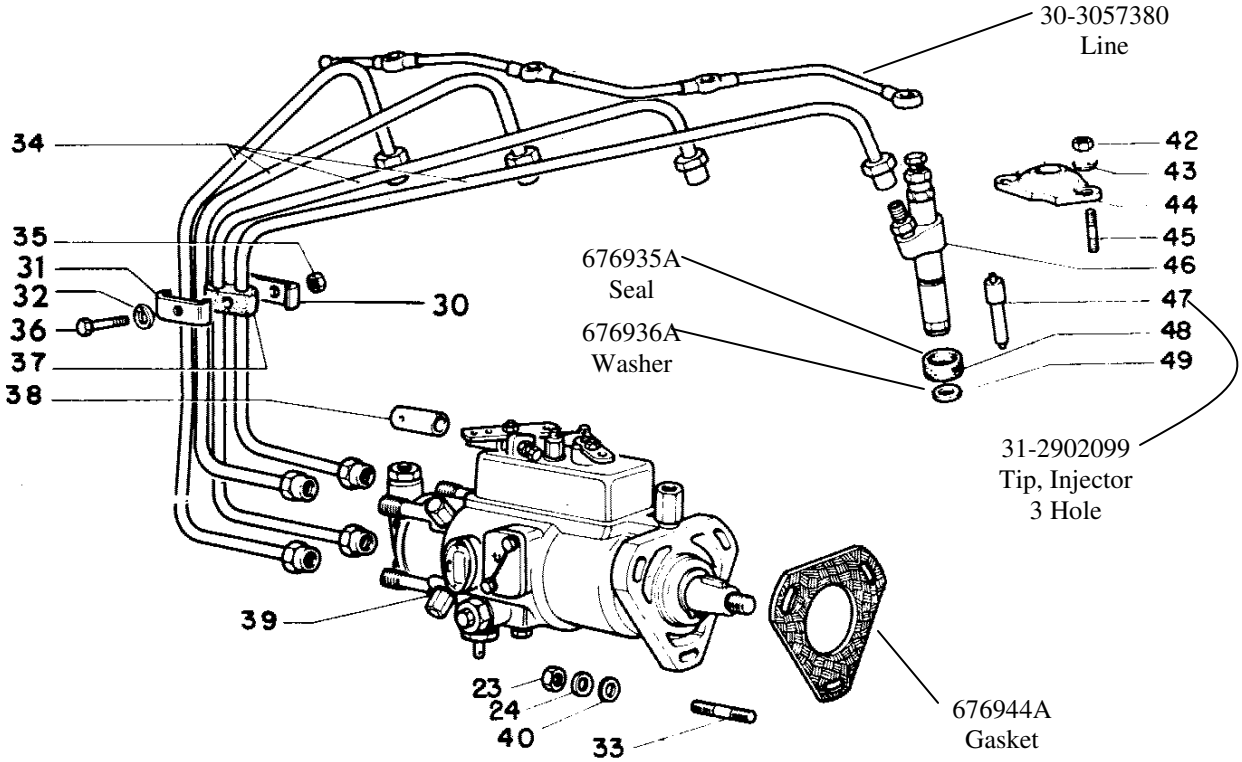
30-3057380
Line
676935A
Seal
676936A
Washer
31-2902099
Tip, Injector
3 Hole
676944A
Gasket

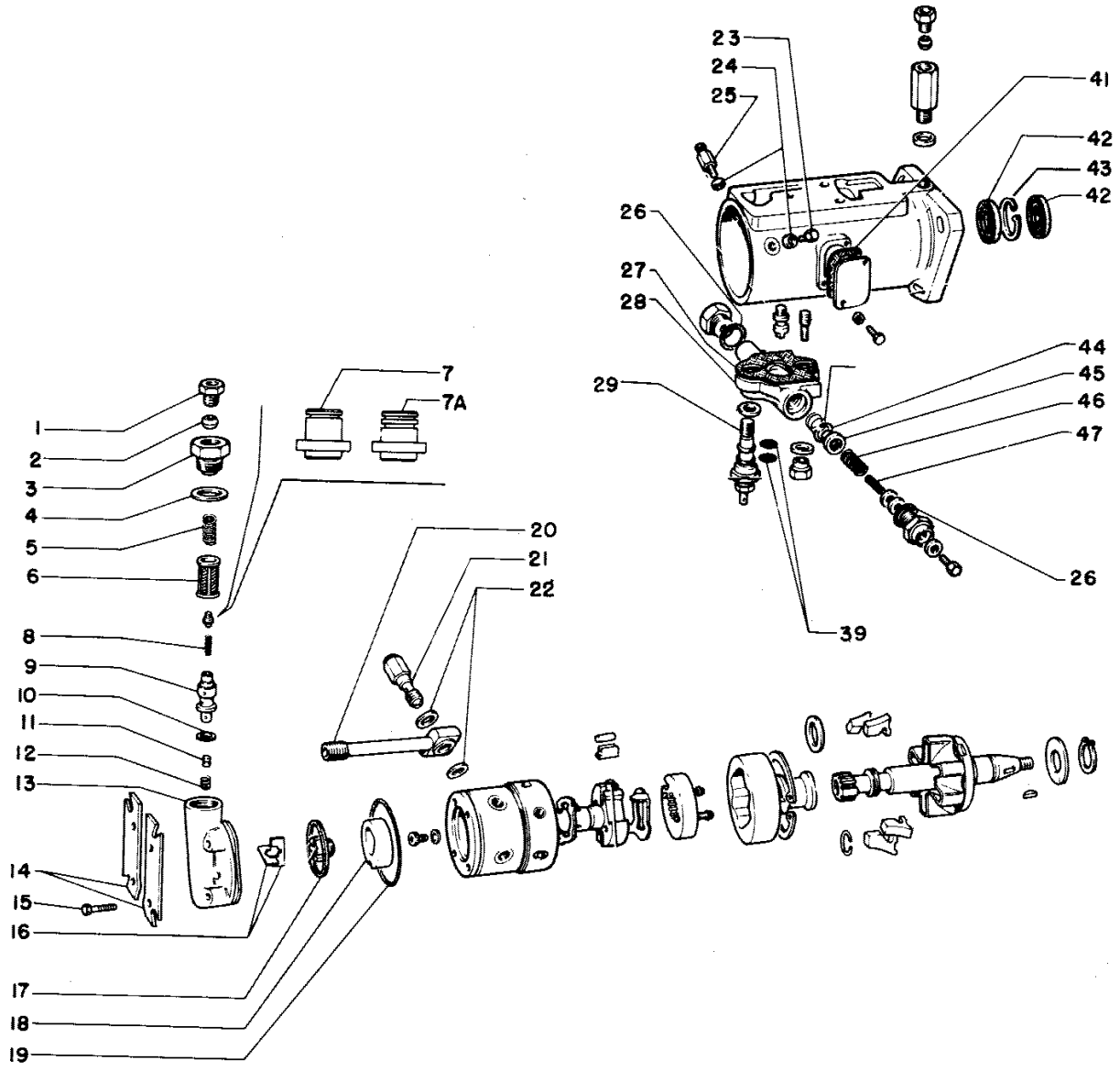
23
24
25
41
42
43
42
26
27
28
44
45
46
47
29
26
39
7
7A
1
2
3
4
5
6
20
21
22
8
9
10
11
12
13
14
15
16
17
18
19

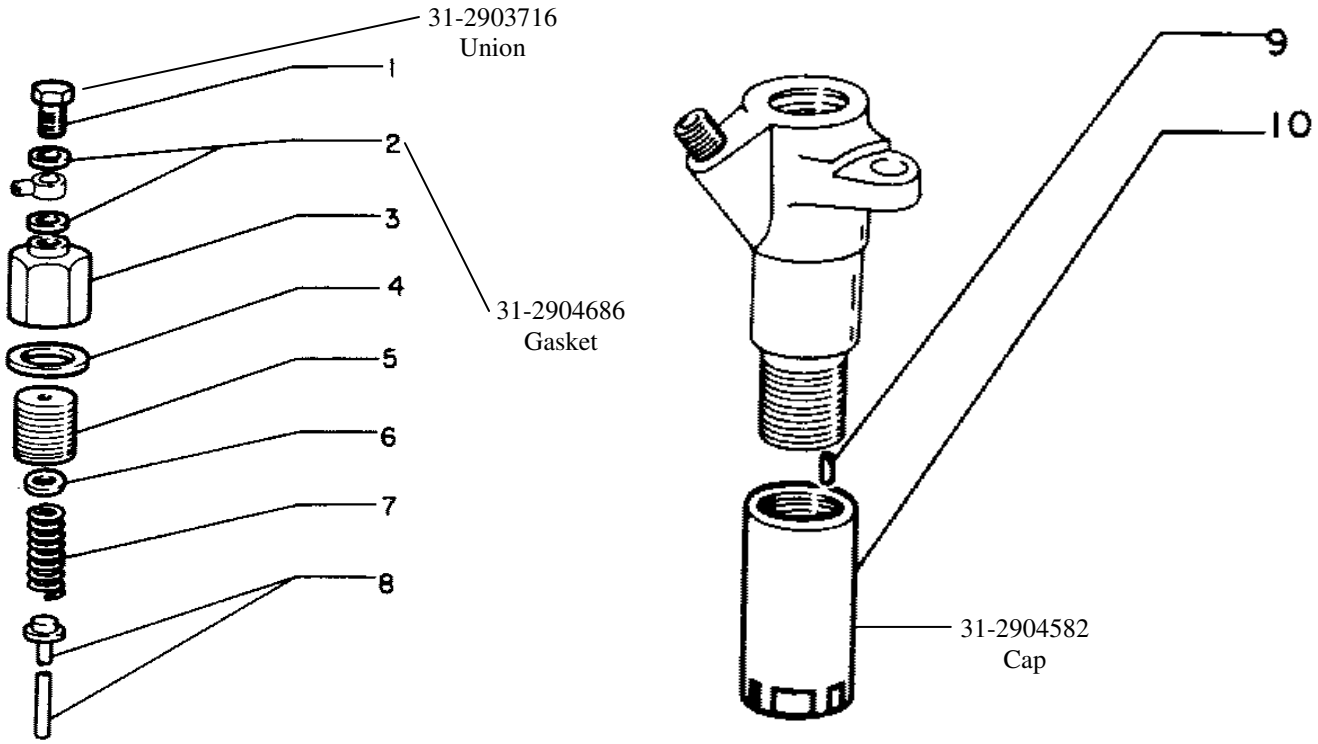
31-2903716
Union
1
2
3
4
5
6
7
8
31-2904686
Gasket
9
10
31-2904582
Cap

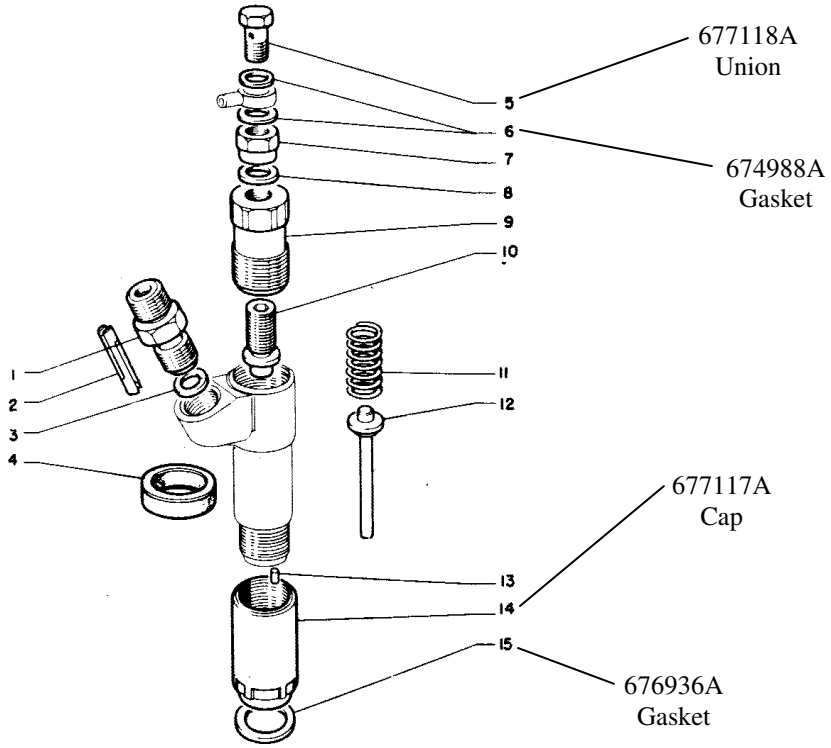
677118A
Union
5
6
7
8
9
10
674988A
Gasket
1
2
3
4
11
12
677117A
Cap
13
14
15
676936A
Gasket

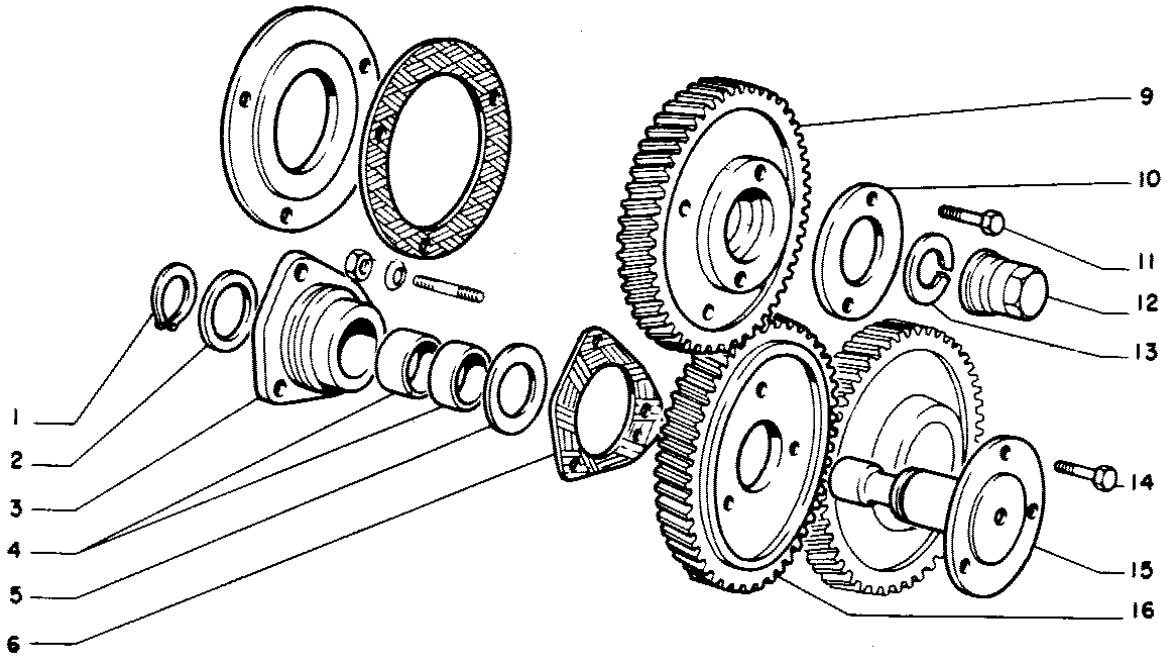
1
2
3
4
5
6
9
10
11
12
13
14
15
16

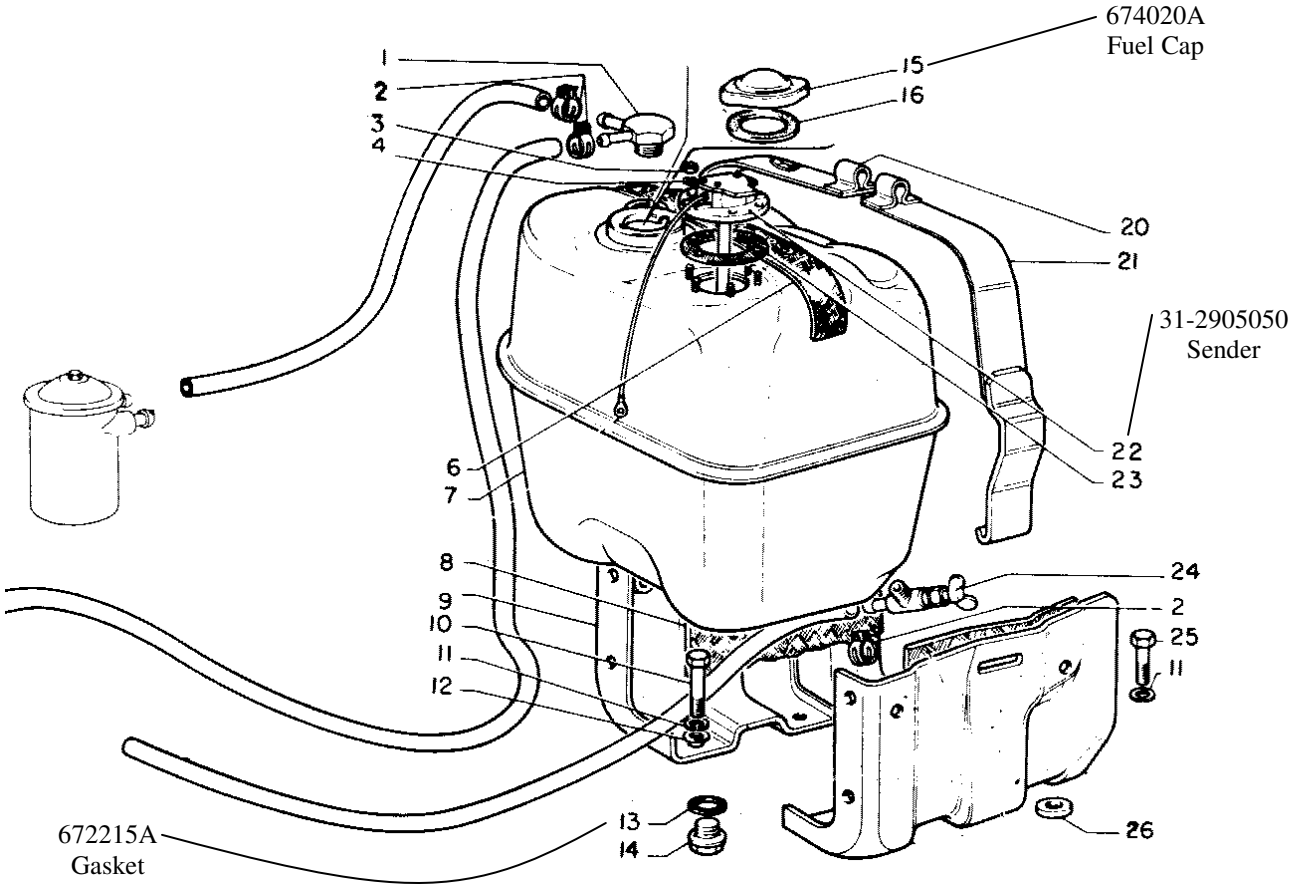
674020A
Fuel Cap
31-2905050
Sender
672215A
Gasket
1
2
3
4
6
7
8
9
10
11
12
13
14
15
16
20
21
22
23
24
2
25
11
26

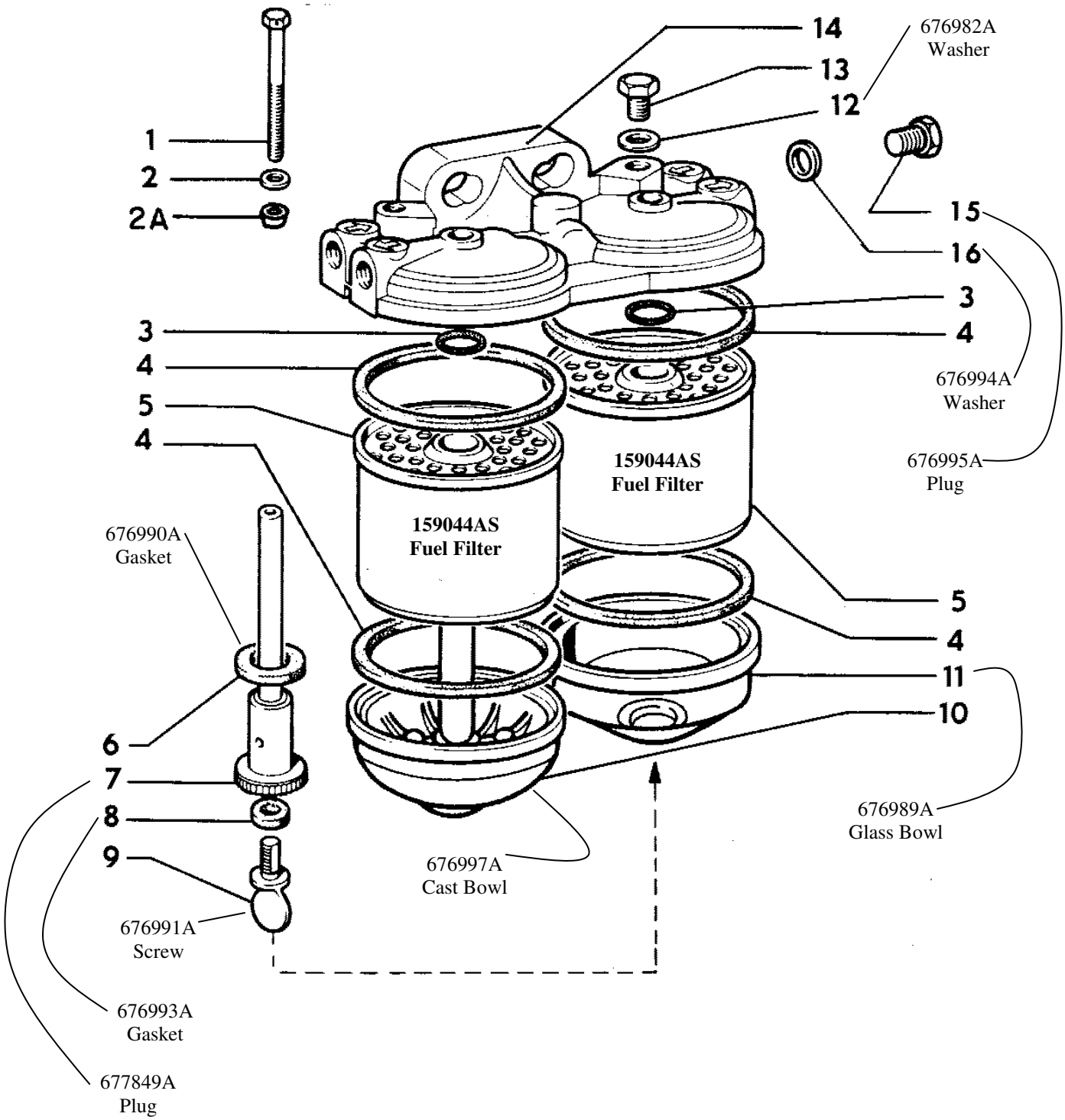
14
13
12
676982A
Washer
1
2
2A
15
16
3
4
676994A
Washer
3
4
5
4
159044AS
Fuel Filter
676995A
Plug
159044AS
Fuel Filter
676990A
Gasket
5
4
11
10
6
7
8
9
676989A
Glass Bowl
676997A
Cast Bowl
676991A
Screw
676993A
Gasket
677849A
Plug